

CERT Unit 7: Light Search and Rescue Operations

Participant Manual

FEMA

CERT COMMUNITY EMERGENCY RESPONSE TEAM



CERT Unit 7: Light Search and Rescue Operations

In this unit, you will learn about:

- **Search and Rescue Size-up:** How to size up the situation in which the search and rescue teams will operate.
- **Conducting Interior and Exterior Search Operations:** How to search systematically for disaster survivors.
- **Conducting Rescue Operations:** Safe techniques for lifting, leveraging, cribbing, and survivor removal.

CERT Unit 7 Table of Contents

SECTION 1: UNIT 7 OVERVIEW 1

Unit Objectives 1

Unit Overview 1

Deciding to Attempt Rescue 1

Goals of Search and Rescue 1

Effective Search and Rescue 1

SECTION 2: SAFETY DURING SEARCH AND RESCUE OPERATIONS 3

CERT Search and Rescue Size-up 3

Step 1: Gather Facts 5

Exercise 7.1: Gathering Facts 5

Scenario 6

Step 2: Assess and Communicate Damage 6

CERT Mission and Types of Damages 6

Damage is Light 6

Damage is Moderate 7

Damage is Heavy 7

Assessing Damage 7

Communicating Damage 7

Step 3: Consider Probabilities 9

Step 4: Assess Your Situation 10

Rescue Resources 10

Step 5: Establish Priorities 11

Step 6: Make Decisions 11

Step 7: Develop Plan of Action 12

Step 8: Take Action 12

Step 9: Evaluate Progress 12

Specific Safety Considerations 12

Exercise 7.2: Search and Rescue Size-up 13

SECTION 3: CONDUCTING INTERIOR AND EXTERIOR SEARCH OPERATIONS 14

Locating Potential Survivors in a Structure 14

Structural Voids 14

Individual Voids 14

Search Methodology 15

Search Markings 15
Search Methodology 15
Exterior Search 16
SECTION 4: CONDUCTING RESCUE OPERATIONS 18
Creating a Safe Environment 18
Precautions to Minimize Risk 18
Leveraging and Cribbing 19
Leveraging and Cribbing Steps 20
Team Organization for Leveraging/Cribbing Operations 21
Removing Survivors 22
Extrication Method 22
One-Person Arm Carry 22
Pack-Strap Carry 23
Two-Person Carry 23
Chair Carry 24
Blanket Carry 25
Log Rolling 26
Drag/Blanket Drag 26
Exercise 7.3: Survivor Carries 27
Exercise 7.4: Survivor Extrication 27
UNIT 7 SUMMARY 28
Homework Assignment 29

SECTION 1: UNIT 7 OVERVIEW

Unit Objectives

At the end of this unit, you should be able to:

1. Identify and apply CERT size-up requirements for potential search and rescue situations;
2. Demonstrate the most common techniques for light search and rescue; and
3. Demonstrate safe techniques for debris removal and survivor extrication during search and rescue operations.

Unit Overview

Search and rescue consist of three separate operations:

1. Size-up involves assessing the situation and determining a safe action plan (using the nine-step size-up model).
2. Search involves locating survivors and documenting their location.
3. Rescue involves the procedures and methods required to extricate the survivors.

Previous disasters have shown that the first response to trapped survivors immediately after almost every disaster is by spontaneous, untrained, and well-intentioned persons who rush to the site of a collapse in an attempt to free the survivors.

Often, these spontaneous rescue efforts result in serious injuries and compounded problems. Plan and practice rescue efforts in advance. People, including rescuers, have died when the rescuers were not prepared and trained.

Deciding to Attempt Rescue

The decision to attempt a rescue should be based on three factors:

1. Risks involved to both the rescuer and the survivor;
2. The overall goal of doing the greatest good for the greatest number of people; and
3. Resources and labor available.

Goals of Search and Rescue

The goals of search and rescue operations are to:

- Rescue the greatest number of people in the shortest amount of time;
- Get the walking wounded and ambulatory survivors out first;
- Rescue lightly trapped survivors next; and
- Keep the rescuers and survivors safe.

Effective Search and Rescue

Effective search and rescue operations hinge on:

- Effective size-up;
- Rescuer safety; and

- Survivor safety

This unit focuses on the components of an effective search and rescue operation—size-up, search, and rescue—and the methods and techniques that rescuers can use to locate and safely remove survivors.

SECTION 2: SAFETY DURING SEARCH AND RESCUE OPERATIONS

CERT Search and Rescue Size-up

Like all CERT operations, search and rescue requires size-up at the beginning of the operation and throughout its duration. As a reminder, size-up steps include:

- Gathering facts;
- Assessing damage;
- Considering probabilities;
- Assessing your situation;
- Establishing priorities;
- Making decisions;
- Developing a plan of action;
- Taking action; and
- Evaluating progress.

Table 7.1: CERT Search and Rescue Size-up Checklist

Step 1: Gather Facts		
Time		
Does the time of day or week affect search and rescue efforts? How?	Yes	No
Type of Construction		
What type(s) of structure(s) is (are) involved?		
What type(s) of construction is (are) involved?		
What type(s) of terrain is (are) involved?		
Occupancy		
Are the structures occupied? If yes, how many people are likely to be affected?	Yes	No
Are there special considerations (e.g. children, elderly, pets, people with access and functional needs)? If yes, what are the special considerations?	Yes	No
Weather		
Will weather conditions affect your safety? If yes, how will your safety be affected?	Yes	No
Will weather conditions affect the search and rescue situation? If yes, how will the search and rescue situation be affected?	Yes	No

Step 1: Gather Facts		
Hazards		
Are hazardous materials involved? If yes, at what location?	Yes	No
Are any other types of hazards involved? Is yes, what other hazards?	Yes	No
Step 2: Assess and Communicate the Damage		
For structural searches, take a lap around the building. Is the damage beyond the CERT's capability? If yes, what special requirements or specifications are required?	Yes	No
Have you communicated the facts and the initial damage assessment to the appropriate person(s)?	Yes	No
Step 3: Consider Possibilities		
Is the situation stable?	Yes	No
Is there a great risk or potential for more disaster activity that will affect personal safety? If yes, what are the known risks?	Yes	No
What else could go wrong?	Yes	No
Step 4: Assess Your Own Situation		
What available resources do you have to attempt the search and rescue?		
What equipment is available?		
Step 5: Establish Priorities		
Can CERT volunteers attempt a search and rescue *safely*? If no, do not attempt a search and rescue.	Yes	No
Are there any other more pressing needs now? If yes, list.	Yes	No
Step 6: Make Decisions		
Where will deployment of available resources do the most good while maintaining an adequate margin of safety?		
Step 7: Develop Plan of Action		
Determine how best to deploy personnel and other resources.		
Step 8: Take Action		
Put the plan into effect.		

Step 9: Evaluate Progress
Continually size up the situation to identify changes in the scope of the problem, safety risks, and resources availability.

Step 1: Gather Facts

The facts of the situation must guide your search and rescue efforts. When gathering facts, CERT volunteers need to consider:

- The time of the event and day of the week.
  - At night, more people will be in their homes, so the greatest need for search and rescue will be in residential settings. Conversely, during the day, people will be at work, so the need will be in commercial buildings. The locations of people in their homes and the amount of daylight available may also affect search and rescue operations.
- Construction type and terrain.
  - Some types of construction are more susceptible to damage and the type of terrain will affect how best to conduct the search.
- Occupancy.
  - The design purpose of the structure may indicate the likely number of survivors and their location.
- Weather.
  - Severe weather will impact survivors and rescuers alike and will hamper rescue efforts. Consider forecasts of severe weather as a limiting factor on the period during which search and rescue can occur.
- Hazards.
  - Knowledge of other potential hazards in the general and immediate areas is important to search and rescue efforts. For example, if you suspect a gas leak, taking the time to locate and shut off the gas can have a big impact in terms of loss of life.

Exercise 7.1: Gathering Facts

Purpose: This exercise will give you the opportunity to consider some of the facts that CERT search and rescue teams will need to gather during size-up.

Instructions:

- Refer to the Scenario handout.
- Brainstorm the following questions:
  - What does this scenario tell you about the probable density for the affected area?
  - What does this scenario tell you about the facts that volunteers must gather?
  - What impact could these facts have on search and rescue operations?
  - What kinds of search and rescue operations are probable?
  - What, if any, are the constraints that search and rescue personnel may face in this scenario?

— Can volunteers overcome constraints within the established CERT mission? If so, how?

Scenario

At 2:30 p.m. on Tuesday, August 9, a squall line passed through your town. Because of the difference in barometric pressure on either side of the front, a “gust front” with straight-line winds of more than 70 miles per hour preceded the squall line. Continued strong winds and extremely heavy rain followed the gust front. The town loses electricity.

You activate in accordance with your CERT program’s standard operating procedures (SOPs). On the way to the staging area at the local high school, you notice considerable damage, including felled trees and utility lines. Many streets are impassable, making you take a roundabout route to the high school. As you make your way to the staging area, you see that the roof has blown off of a large portion of a local shopping center and that the exterior wall on the west end of the structure has collapsed.

After reaching the staging area, you check in with the Logistics Team Leader, who assigns you to Search and Rescue Team 2. Although CERT volunteers cannot venture into the section of the shopping center that has collapsed, Search and Rescue Team 2 will be searching near the collapsed area to see if there are survivors in that area.

Step 2: Assess and Communicate Damage

There are general guidelines for assessing damage in interior searches and exterior searches. When in doubt about the condition of a building, CERT volunteers should always use the more cautious assessment. If you are unsure about whether damage to a building is moderate or heavy, CERT volunteers should assume heavy damage. The CERT mission changes depending on the amount of structural damage.

CERT Mission and Types of Damages

The CERT mission for interior searches depends on if damage is light, moderate, or heavy.

Damage is Light

The CERT mission is to locate; assess; treat airway, major bleeding, and low body temperature; continue size-up; and document.

Light damage includes:

- Superficial damage;
- Broken windows;
- Superficial cracks or breaks in the wall surface, for example, fallen or cracked plaster; and
- Minor damage to the interior contents.

Damage is Moderate

The CERT mission is to locate; treat airway, major bleeding, and low body temperature; evacuate; warn others; continue size-up while minimizing the number of rescuers and time spent inside the structure.

Moderate damage includes:

- Visible signs of damage;
- Decorative work damaged or fallen;
- Many visible cracks or breaks in the wall surface;
- Major damage to interior contents; and
- Building still on foundation.

Damage is Heavy

The CERT mission is to secure the building perimeter and warn others of the danger in entering the building.

Heavy damage includes:

- Partial or total collapse;
- Tilting;
- Obvious structural instability;
- Building off foundation;
- Heavy smoke or fire;
- Gas leaks/hazardous materials inside; and
- Rising or moving water.

CERT volunteers are not to enter a building with heavy damage under any circumstances.

Assessing Damage

Assessing the damage of a building or structure will require an examination from all sides. Be sure to do an initial "lap around" the building.

In assessing damage, CERT personnel must consider probable levels of damage based on the type and age of construction.

In addition to a visual assessment, rescuers should also “listen” to damaged structures. If a building is creaking or “groaning,” it is unstable and volunteers should not enter it.

Communicating Damage

You can describe different locations within and around the structure by using the ABCD standard, with A corresponding to the front of the building and B, C, and D representing the sides of the building moving clockwise from A.

Using this system, volunteers can break down the area inside of a structure by quadrants to facilitate communication. For instance, a hazard or survivor located closest to the A and B sides of the structure is in the A/B quadrant.

Remember, you must communicate your findings to the CERT command post or responding agencies.

Table 7.2: Probable Severity and Type of Earthquake Damage Based on Construction Type

Construction Type	Description	Probable Damage Areas	Severity
Single-Family Dwelling	• Wood frame	• Masonry chimney • Utilities	Light
	• Pre-1933	• Foundation movement • Utilities • Porches	Moderate
	• Hillside	• Unique hazards • Ground failure	Heavy
Multi-Family Dwelling	• Up-and-down and/or side-by side living units	• Soft first floor • Utilities	Moderate
Unreinforced Brick	• Pre-1933 construction • Lime or sand mortar • "King Row" or • "Soldier Row" (bricks turned on end every 5-7 rows) • Reinforcing plates • Arched windows and doors • Recessed windows and doors	• Walls collapse, then roof	Heavy
Tilt-up	• Large warehouses and plants • Concrete slabs lifted into place • Walls in set approximately 6-8 inches • Lightweight roof construction	• Roof collapses, then walls	Heavy
High-Rise	• Steel reinforced	• Broken glass • Content movement • Exterior trim and fascia	Light

Step 3: Consider Probabilities

Because you will be working in close proximity to the dangerous situation, considering what will probably happen and what could happen are of critical importance. Be sure to identify potentially life-threatening hazards and ask:

- How stable is the situation?
  - — Even within a structure that appears from the outside to have only minimal or moderate damage, nonstructural damage or instability inside the structure can pose real danger to the rescue team. CERT volunteers should think about what they already know about the structure that has been damaged. Are lawn chemicals, paints, or other potentially hazardous materials stored within the structure? How are they stored? Where are

they? It will not take CERT volunteers much time to answer these types of questions, but the answers could make a huge difference in how they approach the search.

- What secondary factors should CERT volunteers consider?
  - Take a moment to look around and assess the situation outside of the immediate area. What is the weather doing? Is the wind changing? Is a storm moving in that would affect the response? Is there a crowd growing? Are there very few people around? Do you hear first responders in the distance, or is everything quiet?
- What else could go wrong?
  - Based on the information gathered during Steps 1 and 2 of the size-up, CERT volunteers should take a few moments to play "What if?" to try to identify additional risks that they may face. What happens if the power goes out during the search? What if a wall that appears stable shifts and collapses? Applying "Murphy's Law" to the situation could save CERT volunteers' lives.
- What does it all mean for the search and rescue?
  - Based on the probabilities, CERTs should think about what they can do to reduce the risks associated with the probabilities that they have identified. Is a spotter necessary to look for movement that could indicate a possible collapse and warn the rescue team? Is some remedial action required to stabilize nonstructural hazards before beginning the search? CERT search and rescue teams must remember that their own safety is the priority.

Step 4: Assess Your Situation

Remember that size-up is a compounding process, with each step building upon the previous steps until the decision is made to either begin the search and rescue operation or that the situation is not safe to begin. You need to draw on everything you learned from Steps 1 through 3 to assess your situation to determine:

- Whether the situation is safe enough to continue;
- The risks that rescuers will face if they continue; and
- The available resources volunteers will need to conduct the operation safely.

Assessing resources, including personnel, tools, and equipment, is extremely important to search and rescue operations.

Rescue Resources

Search and rescue resources include personnel, equipment, and tools. Below, find questions that you should ask yourself regarding the availability of these types of resources.

Table 7.3: Search and Rescue Resource Planning Questions

Resource	Planning Questions
Personnel	• How many trained CERT volunteers are available for this operation? • Who lives and/or works in the area? • During what hours are these people most likely to be available? • What skills or hobbies do they have that might be useful in search and rescue operations? • What might be the most effective means of mobilizing their efforts? • Do all team members have everyone else's cell number?
Equipment	• What equipment is available locally that might be useful for search and rescue? • Where is it located? • How can volunteers access it? • On which structures (or types of structures) might it be most effective?
Tools	• What tools are available that might be useful to lift, move, or cut disaster debris? • What tools are available that will aid communication?

Step 5: Establish Priorities

After evaluating the situation and keeping in mind that the safety of the CERT volunteer is always the top priority, the next step is to determine:

- What should be done; and
- In what order.

The safety of CERT volunteers is always the first priority and will dictate some of the other priorities. For example, volunteers must complete the task of removing or mitigating known hazards before teams begin to search. Think through the situation logically to determine how you should approach the operation.

Priority determinations are based on:

- The safety of CERT volunteers;
- Life safety for survivors and others;
- Protection of the environment; and
- Protection of property.

Remember your goal: Rescue the greatest number in the shortest amount of time, but not at the expense of your own safety.

Step 6: Make Decisions

At this point in the size-up you will make decisions about where to deploy your resources to do the most good while maintaining an adequate margin of safety. You will base many of your decisions on the priorities established during Step 5.

Step 7: Develop Plan of Action

Step 7 is where all of the information you have about the situation comes together. During Step 7, the CERT Team Leader (TL) will decide specifically how the team will conduct its operation, considering the highest priority tasks first.

You do not have to write down an action plan, but when search and rescue operations are required, the situation is probably complex enough that a written plan of some type will be important.

A plan should:

- Help focus the operation on established priorities and decisions.
- Provide for documentation to give to responding agencies when they arrive on scene.
- Provide for documentation that will become part of the record of the CERT's overall operation.

Keep notes as you develop your action plan. Volunteers should document any changes made to the initial plan based on new information that emerges.

Step 8: Take Action

This step involves putting the plan developed in Step 7 into action.

Step 9: Evaluate Progress

Step 9, Evaluate Progress, is the most critical step, not only in terms of evaluating whether the plan works, but also from a safety standpoint.

Remember that size-up is ongoing and that information gained during Step 9 needs to be fed back into the decision-making process for possible revision of priorities and updated action planning.

Specific Safety Considerations

Regardless of the severity of structural damage, rescuer safety must be the primary concern. The most frequent causes of rescuer deaths are disorientation and secondary collapse.

Follow these guidelines during all search and rescue operations:

- Use a buddy system.
  - Successful search and rescue depend on teamwork.
- Be alert for hazards (e.g., power lines, natural gas leaks, hazardous materials, sharp objects).
  - You should never attempt to search an area where water is rising.
- Use safety equipment.
  - Wearing gloves and a helmet will protect a rescuer's hands and head. Kneepads, coveralls, and thick-soled boots will protect a rescuer from glass and other sharp objects found on the ground following many natural disasters. The primary cause of rescuer problems after working in a

structural collapse is breathing dust, so a dust mask is essential. However, a dust mask will not filter out all harmful materials. If volunteers suspect the presence of chemical or biological agents, they must evacuate to an upwind location and notify professional responders.

- Have backup teams available to allow rotation of teams, prevent fatigue, and ensure help if a team gets into trouble. Have teams drink fluids and eat to keep themselves fresh.

Exercise 7.2: Search and Rescue Size-up

Purpose: This exercise is an interactive activity that will provide an opportunity to practice some of the thinking processes involved in planning and search and rescue size-up.

The brainstorming required will help you to begin to assess your neighborhoods or workplaces in terms of building structures, hazardous materials, and any necessary safety precautions.

Instructions:

1. Assemble in groups of four or five.
2. Read the scenario given to you by the instructor.
3. Designate a recorder and, given the disaster and the specific building, answer the following questions:
   - What are the pertinent facts that must be gathered?
     What kind of prediction can you make regarding damage, based on the incident and the building construction?
   - What probable search and rescue problems can you identify?
   - What specific safety considerations can you identify?
4. Select a spokesperson to present the group's responses to the class.

SECTION 3: CONDUCTING INTERIOR AND EXTERIOR SEARCH OPERATIONS

When a CERT makes the decision to initiate search operations, CERT volunteers will inspect the area assigned by the CERT TL. The search operation involves two processes:

- Employing search techniques based on the size-up; and
- Locating survivors.

By using these processes, search operations will be more efficient, thorough, and safe. They will also facilitate later rescue operations. Although the processes are related, this section addresses them one at a time. Interior search operations are the most common and discussed first; exterior search operations will be discussed later in this unit.

Locating Potential Survivors in a Structure

The first step in locating potential survivors in a structure is to gather more precise information about damage and to develop priorities and plans by conducting a size-up of the interior of the building. The data gathered will provide more information about possible areas of entrapment or voids.

Structural Voids

There are several types of structural voids:

- Pancake void
- Lean-to void
- “V” void

Survivors may be trapped in a structural void. If you hear any signs of life coming from a structural void, report it to the TL immediately and make appropriate markings to direct professional rescuers, but do not attempt the rescue yourself. Attempting to rescue a person from a structural void without proper equipment may result in completing the collapse and harming the trapped person.

If CERT volunteers see collapsed floors or walls, they should leave the premises immediately.

Individual Voids

Individual voids are spaces into which the survivor may have crawled for protection. Examples of individual voids include bathtubs and the space underneath desks. Children may seek shelter in smaller places like cabinets.

After identifying the possible areas of entrapment, CERT volunteers must:

- Determine the potential number of survivors; and
- Identify the most probable areas of entrapment.

Some information may be known through assessment, but CERT volunteers may need to get some information by talking to bystanders or those who are familiar with the structure.

CERT volunteers should ask questions when talking with these individuals, including:

- How many people live (or work) in the building?
- Where would they be at this time?
- What is the building layout?
- What have you seen or heard?
- Has anyone come out?
- What are the normal exit routes from the building?

Be aware that the event may confuse bystanders. They may tend to exaggerate potential numbers or may not even remember the event accurately. Gather as much information as you can, though, because it will be useful for planning search priorities and implementing the search.

Search Methodology

An effective search methodology:

- Indicates rescuer location;
- Locates survivors as quickly and safely as possible; and
- Prevents duplication of effort.

Search Markings

Experienced search and rescue personnel use the following system. CERTs will use the same system. This will save time for fellow CERT volunteers and other responders during the search and continual size-up of the structure.

Upon entering a search area, you will make a mark next to the door to indicate that you are entering. Do not make the mark on the door or on the wall where the door swings. Make a single slash and write the agency or group ID at the “9 o’clock” position. Then write the date and “time in” at the “12 o’clock” position.

Upon exiting the search area, make another slash to form an “X” (the agency or group ID will be in the left quadrant). Enter the search “time out” In the top quadrant.

- **Right quadrant:** Enter the areas of the structure searched and any specific information about hazards.
- **Lower quadrant:** Enter information about the survivors found in the search area. “L” represents living and “D” represents dead. The search marking on the front of a structure or building should contain the total number of survivors, whereas search markings inside the structure or building will include survivor totals for specific search areas. Indicate where survivors were taken.

Search Methodology

- Use the buddy system.
  - Always remain within arm’s reach of at least one other CERT volunteer when conducting an interior search. This is to enable assistance in the event of a slip or a fall and to be able to push or pull one another out of harm's way.

- Upon entering each space or room, call out to survivors.
  - Shout something like, "If anyone can hear my voice, come here." If any survivors come to you, ask them for any information that they may have about the building or others who may be trapped then, depending on the condition of the building, give them further directions such as, "Stay here" or "Wait outside".

Remember that even those who are able to get to you may be in shock and confused. When giving directions to survivors, CERT volunteers should look directly at the survivors, speak in short sentences, and keep their directions simple.

Use a systematic search pattern. Ensure that all areas of the building are covered. Examples of systematic search patterns to use include:

- Bottom-up/top-down; and
- Right wall/left wall.

Keep in mind that every interior space has six sides — including the floor and ceiling. Rescuers must check all six sides to locate hazards such as fixtures that may be hanging from the ceiling

- **Stop frequently to listen:** Listen for tapping, movement, or voices.
- **Triangulate:** Consider using triangulation when a potential survivor's location is obscured. If access permits, three rescuers, guided by survivor sounds, form a triangle around the area and direct flashlights into the area. The light shining from different directions will eliminate shadows that could otherwise hide survivors. Triangulation should not be used as an initial search method.
- **Report results:** Keep complete records both of removed survivors and of survivors who remain trapped or are dead. Report this information to emergency services personnel when they reach the scene.

Exterior Search

In addition to searching inside a structure, CERT volunteers may need to search open areas outside of buildings.

Conducting an effective search in open areas requires that searchers work methodically and follow standard procedures established by those in charge of the search operation. This is true in all cases, especially if the area is a crime scene, where all potential evidence must be protected.

If searchers are needed, they should assemble in a central staging area and sign in. Authorities will brief the searchers on what they will be looking for, what areas they are responsible for searching, the pattern of the search, and what they should do if they discover the missing person, evidence, or related information.

Exterior search patterns include grid, line, quadrant or zone, and spiral. Typically, a grid pattern is used in large open areas or small areas when a hands-and-knees search is conducted.

Grid is one of the most commonly used types of search patterns. Keep the guidelines below in mind when conducting a grid search.

- View the search area as a grid, with searchers initially positioned at one side of the grid.
- The distance between the searchers should be set according to visibility and debris. In all cases, searchers must remain within line of sight and voice contact with searchers on either side of them.
- It is critical that the area assigned to each searcher overlaps that of the searchers on either side of them.
- The searchers proceed, maintaining as straight a line as possible across the entire search area. As each searcher moves across the area, they conduct a thorough search for survivors within their designated row of the grid.
- To ensure full coverage, CERTs must record each area searched.
- A grid search might be particularly useful following a tornado or hurricane.

SECTION 4: CONDUCTING RESCUE OPERATIONS

Rescues involve three primary functions:

1. Moving objects and debris to create a safe rescue environment and free survivors;
2. Assessing survivors, checking for life-threatening conditions such as airway obstruction, severe bleeding, and low body temperature; and
3. Removing survivors as safely and as quickly as possible.

Creating a Safe Environment

There are three safety considerations for all rescue operations:

1. Maintain rescuer safety;
2. Assess survivors in lightly and moderately damaged buildings; and
3. Evacuate survivors as quickly as possible from moderately damaged buildings while minimizing additional injury.

CERTs cannot achieve these considerations without creating as safe an environment as possible before attempting rescue. Therefore, there are certain precautions that rescuers must take to minimize risk.

Precautions to Minimize Risk

There are certain precautions that rescuers must take to minimize risk and increase their chances of achieving their rescue goals.

- **Know Your Limitations:** Many volunteers have been injured or killed during rescue operations because they did not pay attention to their own physical and mental limitations. CERT rescuers should take the time to drink fluids, eat, relax, and rest so that they can return with a clear mind and improved energy.
- **Follow Safety Procedures:** CERT volunteers should always use the proper safety equipment required for the situation and follow established procedures, including:
  - Work in pairs.
  - Assess and treat only in lightly damaged buildings.
  - In moderately damaged buildings, assess only and remove survivors as quickly as possible.
  - Never enter an unstable structure.
  - Lift by bending the knees, keeping the back straight, and pushing up with the legs.
  - Carry the load close to the body.
  - Lift and carry no more than is reasonable.
- **Remove Debris:** Remove debris as needed to minimize risk to rescuers and to free entrapped survivors.

Image 7.1: Proper Body Position for Lifting

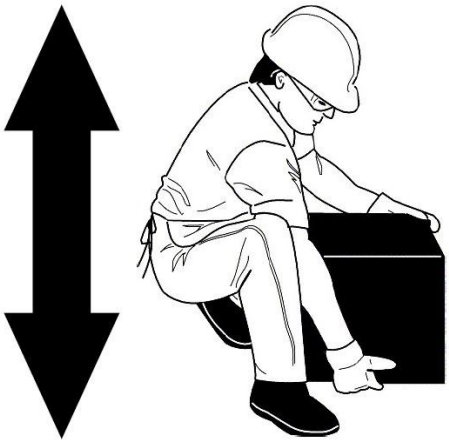

Proper body position for lifting showing the back straight and lifting with the knees.

Leveraging and Cribbing

You may encounter situations in which moving debris is needed to free survivors. In these situations, CERT rescuers should consider leveraging and cribbing to move and stabilize the debris until the rescue is complete.

- Leveraging is accomplished by wedging a lever under the object that needs to be moved, with a stationary object underneath it to act as a fulcrum. When the lever is forced down over the fulcrum, the far end of the lever will lift the object.
- A crib is a wooden framework used for support or strengthening the object.
  - Box cribbing means arranging pairs of wood pieces alternately to form a stable rectangle.
  - You may use a variety of cribbing materials for these procedures and you will need to improvise by using materials such as tires or structural debris. Whatever you use, do not put form over function.

Volunteers may use leveraging and cribbing together by alternately lifting the object and placing cribbing materials underneath the lifted edge to stabilize it.

Safety is number one: "Lift an inch; crib an inch." Leveraging and cribbing should be gradual for stability, safety, and efficiency.

It may also be necessary to use leveraging and cribbing at more than one location (e.g., front and back) to ensure stability. Never leverage and crib on opposite ends at the same time because doing so will increase the instability of the debris. If leveraging is required at both ends, lift and crib at one end, then repeat the process at the other end.

Positioning the lever and the fulcrum correctly is critical for safe operations. The fulcrum and pry tool must be perpendicular (90 degrees) to the edge of the object being lifted. Attempting to leverage a heavy object using too sharp an angle is inefficient and can result in back injury.

Box cribbing is stable, but it requires pieces of cribbing material of relatively uniform size. When such material is not available, “unboxed” cribbing can also work effectively to support and stabilize the heavy object.

When you are able to achieve sufficient lift, you should remove the survivor and reverse the leveraging and cribbing procedure to lower the object. You should never leave an unsafe condition unless the event has left the structure or building obviously compromised.

When you must remove debris to locate survivors, you should set up a human chain and pass the debris from one person to the next. Be careful, however, to set up the chain in a position that will not interfere with rescue operations.

Wear your PPE to protect yourself always. Kneepads can be an important addition to your PPE during rescue operations.

Leveraging and Cribbing Steps

Step 1: Conduct a size-up of the scene. Gather facts, identify hazards, and establish priorities.

Step 2: Have one person in charge and formulate a plan of action, based upon the information you have received, to identify how and where to lift and crib and to determine how you will remove the survivor from underneath the debris.

Step 3: Gather necessary materials for lifting/cribbing operations: lever, fulcrum, cribbing blocks, spacers/wedges. During an actual emergency, you may have to use creative, substitute materials.

Step 4: Use cribbing materials to stabilize the object prior to lifting.

Step 5: Distribute cribbing materials as necessary to be readily accessible during the lifting operation.

Step 6: Prepare to lift the object: Assemble the lever and fulcrum at the previously identified location.

Step 7: Assign a person to monitor and be ready to remove the survivor as soon as possible.

Step 8: Initiate the lift, using the lever and fulcrum for mechanical advantage.

Step 9: As the object is lifted, add cribbing as needed, one layer at a time.

Step 10: Once the object is adequately supported, remove the lever and fulcrum. You may then remove the survivor.

Step 11: Unless the event has left the structure obviously compromised, requiring you to evacuate immediately, reinitiate the lift and begin removing cribbing materials, reversing the process by which you built the crib.

Step 12: Progressively lower the object to the ground. Always return the heavy object to a stable position unless you have to evacuate immediately.

Step 13: Before you leave, remember to collect the lifting/cribbing supplies to be available for additional operations.

Image 7.2: Leveraging and Cribbing

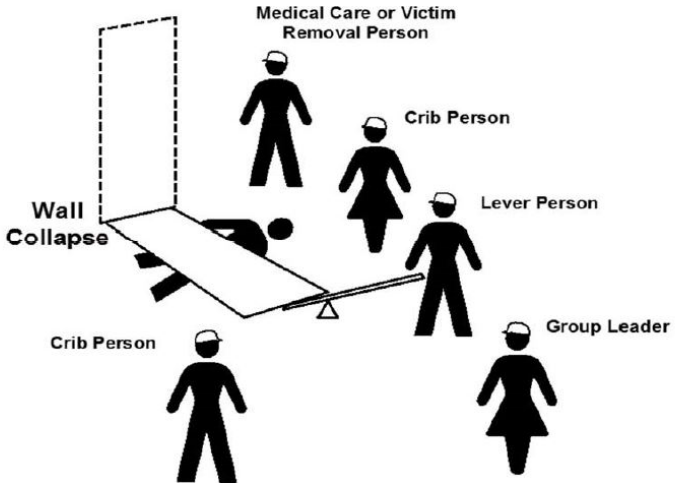

Team Organization for Leveraging/Cribbing Operations

Team organization for leveraging/cribbing operation, showing the survivor underneath a collapsed wall and the CERT volunteers at the following locations:

- **Group Leader:** In front of collapse, positioned so that he or she can view the entire operation while remaining out of the rescuers' way;
- **Lever Person:** At the front edge of the collapsed wall and positioned so that he or she can position a fulcrum and lever under the wall;
- **Crib Persons:** On either side of the collapsed wall and positioned to enable the placement of cribbing as the wall is raised with the lever; and
- **Medical Care/Survivor Removal Person:** Next to the Crib Person who is closest to the survivor's head.

Image 7.3: Box Cribbing

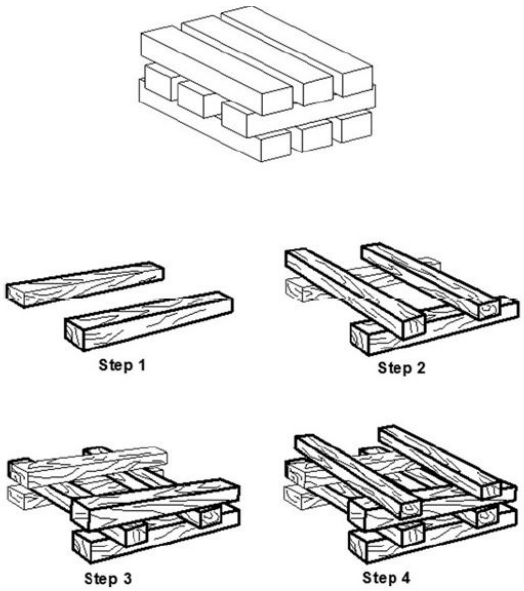

Four Steps to Box Building

Steps for building box cribbing:

Step 1: Position two pieces of wood parallel to each other on either side of the collapse.

Step 2: Place two pieces of wood perpendicularly across the base pieces.

Steps 3 and 4: Add additional layers of wood, with each perpendicular to the previous level.

Removing Survivors

The basic types of survivor removal are:

- Self-removal or assist; and
- Lifts and drags.

It is usually best to allow an ambulatory survivor to extricate him or herself. Be aware that ambulatory survivors are not always as strong and free of injury as they believe. When survivors are freed, they may need assistance to exit the structure.

Extrication Method

The type of extrication method selected should depend on the:

- General stability of the immediate environment;
- Number of rescuers available;
- Strength and ability of the rescuers; and
- Condition of the survivor.

If safety and time permit, you should not use lifts and drags to remove survivors when you suspect the survivors have closed-head or spinal injuries. In such cases, stabilize the spine using a backboard. You can use doors, tables, and similar materials as improvised backboards. The backboard must be able to carry the person and remember to use proper lifting techniques.

When moving survivors, rescuers must use teamwork and communication and try to keep the survivor's spine in a straight line. Remember, rescuer safety and the condition of the building will dictate the approach.

One-Person Arm Carry

If a rescuer is physically able and the survivor is small, the rescuer may use the one-person arm carry to lift and carry the survivor by:

- Reaching around the survivor’s back and under the knees; and
- Lifting the survivor while keeping your back straight and lifting with your legs. Consider the size of the survivor and the distance in which you will need to carry him or her before using this carry.

Image 7.4: One-Person Arm Carry



One-Person Arm Carry with rescuer holding survivor around the back and under the knees.

Pack-Strap Carry

Another way for a single rescuer to lift a survivor safely is by using the one-person pack-strap carry. Using this method, you should:

Step 1: Stand with your back to the survivor.

Step 2: Place the survivor's arms over your shoulders and grab the hands in front of your chest.

Step 3: Hoist the survivor by bending forward slightly, until the survivor's feet just clear the floor.

***Note:** The pack-strap carry is most effective for quick removal of a survivor over a short distance.

Image 7.5: Pack-Strap Carry



One-Person Pack-Strap Carry in which the rescuer places the survivor's arms over his or her shoulders and grabs the survivor's wrists over his or her chest, then hoists the survivor by bending over slightly.

Two-Person Carry

Survivor removal is easier when multiple rescuers are available. The survivor's upper body will weigh more than his or her lower body; therefore, position rescuers with greater body strength at the survivor's upper body. Two rescuers working together can remove a survivor using a two-person carry.

Rescuer 1: Squat at the survivor's head and grasp the survivor from behind around the midsection. Reach under the arms and grasp the survivor's left wrist with rescuer's right hand, and vice versa. Crossing the wrists creates a more secure hold on the survivor, pulling their arms and elbows closer to their body. This will be helpful if rescuers need to carry the survivor through any narrow passages.

Rescuer 2: Squat between the survivor's knees, facing either toward or away from the survivor. Note that, if the rescuers will carry the survivor over uneven areas such as stairs, the rescuers will need to face each other. Grasp the outside of the survivor's legs at the knees.

Both rescuers: Rise to a standing position simultaneously, keeping backs straight and lifting with the legs. Walk the survivor to safety.

Image 7.6: Two-Person Carry



Two-person Carry in which Rescuer 1 squats at the survivor's head and grasps the survivor from behind at the midsection. Rescuer 1 should use his right hand to grab the survivor's right wrist, and vice versa. Rescuer 2 squats between the survivor's knees, grasping the outside of the knees. Both rescuers rise to the standing position. *

Chair Carry

Two rescuers can also remove a survivor by seating him or her on a chair:

Rescuer 1: Cross the survivor's arms in his or her lap. Facing the back of the chair, grasp the back upright.

Rescuer 2: Grasp the two front legs of the chair.

Both rescuers: Tilt the chair back, lift simultaneously, and walk out.

It is best to use a sturdy, non-swivel chair for this lift.

***Note:** If rescuers will need to carry the survivor over uneven surfaces, such as stairs, the rescuers must face each other.

Image 7.7: Chair Carry



Chair Carry in which the survivor is placed in a sturdy, non-swivel chair and tilted backwards as rescuers lift the survivor. This lift requires two rescuers. If possible, secure the survivor to the chair. *

Blanket Carry

Use the blanket carry for survivors you cannot remove by other means. The blanket carry requires four to six rescuers to ensure stability for the survivor and one rescuer designated the lead person:

Step 1: Position a blanket next to the survivor, ensuring that the blanket will extend under the survivor's head.

Step 2: Tuck the blanket under the survivor and assist the survivor in moving to the center of the blanket. If necessary, use the log rolling technique to position them on the blanket.

Step 3: With three rescuers squatting on each side, roll up the edges of the blanket against the survivor to grasp a "handle." The lead person checks the team for even weight distribution and correct lifting position.

Step 4: The lead person calls out, "Ready to lift on the count of three: One, two, three, lift."

Step 5: The team lifts and stands in unison—keeping the survivor level—and carries the survivor feet first.

***Note:** that if rescuers will need to carry the survivor over uneven surfaces, such as stairs, the rescuers must face each other.

The team must also lower the survivor together, using the following steps:

Step 1: The lead person calls out, "Ready to lower on the count of three: One, two, three, lower."

Step 2: The team lowers the survivor in unison, exercising caution to keep the survivor level.

You can use a variety of materials — such as blankets, carpets, and folded tables — as improvised stretchers.

Log Rolling

Rescuers should use the "log rolling" technique to move survivors with a suspected or confirmed cervical spine injury. If the survivor is unconscious, assume he or she has a cervical spine injury. The rescuer at a survivor's head should give commands as fellow rescuers roll the survivor as a single unit onto the blanket, backboard, or other support.

Drag/Blanket Drag

When a rescuer is not able to carry a survivor, they can drag the survivor by grasping either the feet or the shoulders and dragging him or her clear of the hazard. If a blanket is available, use the blanket drag by following these steps:

Step 1: Wrap the survivor in a blanket.

Step 2: Squat down and grasp an edge of the blanket. Step 3: Drag the survivor across the floor.

Image 7.8: Correct Drag Technique

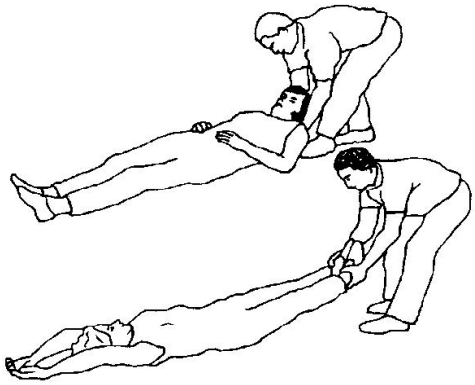

Correct drag technique, showing the rescuer grasping the survivor by either the feet or shoulders and dragging him or her clear of the hazard.

Image 7.9 - Blanket Drag

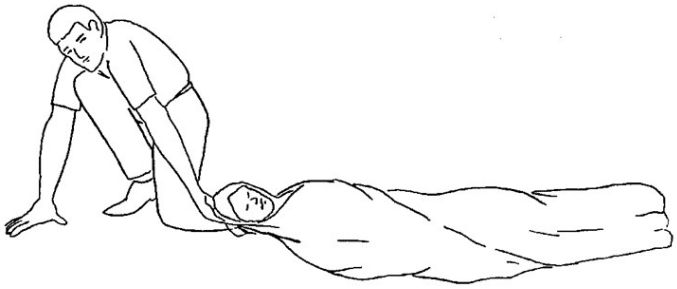

Blanket drag, showing the survivor wrapped in a blanket with the rescuer squatting at the survivor's head. The rescuer grasps the blanket behind the survivor's head and drags him or her clear of the hazard.

Exercise 7.3: Survivor Carries

Purpose: This exercise will provide you with an opportunity to practice different drags and carries designed for safe movement of survivors.

Instructions:

1. Break into teams of seven.
2. Members of your team will volunteer to be “survivors” that other team members will move using the drags and carries demonstrated in the class.
3. Use chairs and other items as needed to perform the drags and carries.
4. Be sure to trade off “survivor” and “rescuer” roles so that everyone on your team has a chance to practice the drags and carries.
5. Remember to know your limits! Do not attempt any lift or carry that will not be safe for you and the survivor.

Exercise 7.4: Survivor Extrication

Purpose: This exercise will provide you with an opportunity to practice the removal of entrapped survivors from a damage site, using leveraging/cribbing and drags and carries.

Instructions:

1. Break into teams of seven.
2. Your team will be directed to a “collapse site.” Consider your plan of action.
3. Enter the “collapse site” and conduct a room search. Locate survivors and make a plan for extricating them from the debris.
4. Use leveraging and cribbing procedures as needed to free the survivor.
5. Use appropriate lifts and drags to remove survivors from the room (and, if possible, from the building).
6. If there is a second “collapse site,” conduct another rescue operation.

UNIT 7 SUMMARY

The key points from this unit are:

- Base the decision to attempt a rescue on:
  - The risks involved; and
  - Achievement of the overall goal of doing the greatest good for the greatest number.
- The objectives of interior and exterior search and rescue are to:
  - Maintain rescuer safety at all times;
  - Rescue the greatest number of people in the shortest amount of time;
  - Get the walking wounded and ambulatory survivors out first; and
  - Rescue the lightly trapped survivors next.
- Remember that CERTs are restricted to light search and rescue. Your mission when dealing with heavily damaged structures or situations that are clearly unsafe (e.g., rising or swiftly moving water) is to warn others.
- Search and rescue size-up follows the same process as other CERT size-up operations. Size-up continues throughout search and rescue efforts and provides information about how to proceed. Remember: the CERT mission is to ensure safety and organization during the evaluation. Therefore, if the size-up indicates that evacuation of the team is necessary, do so immediately.
- When the decision to begin search operations is made, CERT searchers must:
  - Remember that the first priority is volunteer safety;
  - Employ appropriate search techniques; and
  - Locate any survivors and check for life threatening injuries.
- Locating survivors means completing a size-up of the building interior to identify areas of entrapment, then conducting a search that:
  - Is systematic and thorough;
  - Avoids unnecessary duplication of effort; and
  - Documents results.
- Rescue involves these main functions:
  - Moving objects and debris to create a safe rescue environment and free survivors;
  - Assessing or stabilizing survivors by checking for life-threatening conditions (airway obstruction, severe bleeding, and low body temperature); and
  - Removing survivors as safely and as quickly as possible based on the size-up.
- Remember that rescuer safety is always the top priority.
- Rescue operations hinge on maintaining rescuer safety, which requires CERT volunteers to recognize their own limitations. CERT volunteers should never attempt anything that exceeds their limitations at that point in time.
- Rescuers may leverage and crib to lift heavy debris and give access to trapped survivors.
- Rescuers can remove survivors in several ways, depending on:
  - Their condition;

  - The number of rescuers available;
  - The strength and ability of the rescuers; and
  - The stability of the environment.
- Stabilize survivors with suspected head or spinal injuries on some type of backboard before removing. When possible, defer these removals to trained EMS personnel.

Homework Assignment

Read and become familiar with the unit covered in the next session.