W1.35:10-400
Document Reserve

TM 10-400

WAR DEPARTMENT TECHNICAL MANUAL

NON-CIRCULATING

STOVES, RANGES, OVENS, AND COOKING OUTFITS

WAR DEPARTMENT • NOVEMBER 1944

NTSU LIBRARY

AUTHENTICATED U.S. GOVERNMENT INFORMATION GPO

WAR DEPARTMENT TECHNICAL MANUAL

TM 10–400

This manual supersedes paragraphs 77 to 80, inclusive, TM–405, 24 April 1942, and C 1, 11 December 1942; paragraphs 122a and b, 123, 124, 134 and 135, TM 10–410, 1 July 1942; paragraphs 22, 23, 33, 34, 38, 46 to 50 inclusive, and app. A, part 2, TM 10–415, March 1943 and 24 July 1943.

STOVES, RANGES, OVENS, AND COOKING OUTFITS

WAR DEPARTMENT • NOVEMBER 1944

United States Government Printing Office

Washington: 1944

WAR DEPARTMENT,

WASHINGTON 25, D. C., 15 November 1944.

TM 10–400, Stoves, Ranges, Ovens, and Cooking Outfits, is published for the information and guidance of all concerned.

[A.G. 300.7 (26 Jul 44).]

BY ORDER OF THE SECRETARY OF WAR:

G. C. MARSHALL,
Chief of Staff.

OFFICIAL:

J. A. ULIO,
Major General,
The Adjutant General

DISTRIBUTION:

As prescribed in paragraph 9a, FM 21-6; B & L(2); Sv C Parent Sch for B&C (3); Sv C Sub-Sch for B & C (3).

For explanation of symbols, see FM 21–6.

CONTENTS

			Paragraphs	Page
CHAPTER 1.		**INDIVIDUAL AND SMALL UNIT STOVES AND COOKING OUTFITS**		
Section	*I.*	Stove, cooking, gasoline, M1942, One-Burner	1–5	1
	II.	Stove, Cooking, Gasoline, M1941, One-Burner	6–9	8
	III.	Stove, Cooking, Gasoline M1942, Two-Burner	10–12	12
	IV.	Outfits, Cooking, Using Gasoline Stoves, One- and Two-Burner	13–15	12
CHAPTER 2.		**COOKING OUTFITS AND STOVE EXPEDIENTS**		
Section	*I.*	Outfit, Cooking, Pack	16-20	16
	II.	Outfit, Cooking, Small Detachment	21–25	21
	III.	Outfits, Cooking, Wood-Burning, and Stove Expedients	26–29	26
CHAPTER 3.		**RANGES**		
Section	*I.*	Range, Field, M1937	30–39	31
	II.	Range, Army Field, No. 1	40–45	55
	III.	Range, Army Field No. 2	46–51	63
CHAPTER 4.		**OVENS**		
Section	*I.*	Oven, Bake, Field, M1942	52–56	65
	II.	Oven, Bake, Army Field, No. 1	57–63	73
	III.	Improvised Ovens	64–69	78
CHAPTER 5.		**STOVE, TENT, M1941, COMPLETE**	70–72	84
CHAPTER 6.		**DEMOLITION OF EQUIPMENT**	73–75	90

APPENDIX. LIST OF PARTS

			Page
Section	*I.*	All Maintenance Parts For Stoves, Cooking, Gasoline	91
	II.	Parts for Mechanical Maintenance of Outfit, Cooking, Pack (Stock No. 64–0–241)	91
	III.	Parts for Mechanical Maintenance of Outfit, Cooking, Small Detachment (Stock No. 64–0–270)	92
	IV.	Initial Issues of Component Parts, Equipment, Accessories, Utensils, and Spare Parts for Range, Field, M1937	92
	V.	Replacement Parts for Range, Field, M1937	93
	VI.	Parts for Mechanical Maintenance of Range, Field, M1937 (Stock No. 65–J–2225); Heater, Water, Range, Field, M1937 (Stock No. 65–J–1912); Heater, Immersion type for Corrugated Can (Stock No. 65–1911–50); Conversion Set No. 2 (Simplified) for Unit, Fire, M1937 (Stock No. 65–J–2377)	94
	VII.	Range, Army Field, No. 1, Complete with equipment; Stock No. 65–B–1090; Range Only, 65–B–1095	95
	VIII.	Range, Army Field, No. 2, Complete with Equipment; Stock No. 65–C–1065; Range Only, 65–C–1070	95
	IX.	Components and Accessories for Outfit, Baking, Field, M1942, Stock No. 65–A–5000	96
	X.	Parts for Mechanical Maintenance of Outfit, Baking, Field, M1942 (Stock No. 65–A–5000), Consisting of Two Ovens, Bake, Field, M1942, (Stock No. 65–A–5500) with Equipment and Accessories.	96
	XI.	Parts for Mechanical Maintenance of Outfit, Burner, Pot Type, Oven, Bake, Field, M1942 (Stock No. 65–A–5040)	97
	XII.	Oven, Bake, Army Field, No. 1; Complete with Component Parts, Equipment, Accessories, and Spare Parts, Stock No. 65–A–1235 (Oven Only, Stock No. 65–A–1240)	97
	XIII.	Parts for Mechanical Maintenance of Burner, Oil, Stove, Tent, M1941 (Stock No. 65–N–1375)	98

FOREWORD

This manual is designed to furnish information and instructions for the operation and maintenance of all stoves, ranges, ovens, and cooking outfits furnished by the Quartermaster Corps for use in the field.

The appliance described in the manual vary from "pocket size" stoves to large ranges, capable of turning out food for 100 men, and ovens which can bake 1,000 pounds of bread every day. The same scientific skill that produces airplanes, tanks, and guns has been devoted to the development of some of these cooking and heating appliances. America has spared nothing to provide the Army with the best tools that money, materials, and manufacturing knowledge can produce. It is only common sense that the Army, through careful and expert operation and maintenance, should make the most of the tools provided.

The term "stove" is applied to many types of cooking and heating appliances, especially to those of small size. In general, stoves are distinguished from other types of cooking appliances by the fact that only the top surface is used for cooking purposes, although some stoves also have ovens or other interior cooking spaces. An "oven" is an inclosed chamber for baking, roasting, or drying. It may be either an independent unit or part of a stove or range. "Range" is the term normally applied to large size stoves having both an exterior cooking surface and an oven. The word "range" suggests the row, or range, of lids or burners with which such appliances are usually equipped.

This manual supersedes paragraphs 77 to 80, inclusive, TM 10–405, 24 April 1942, and C 1, 11 December 1942; paragraphs 122a and b, 123, 124, 134 and 135, TM 10–410, 1 July 1942; paragraphs 22, 23, 33, 34, 38, 46 to 50 inclusive, and app. A, part 2, TM 10–415, March 1934, and 24 July 1943.

CHAPTER 1

INDIVIDUAL AND SMALL UNIT STOVES AND COOKING OUTFITS

Section I. STOVE, COOKING, GASOLINE, M1942, ONE-BURNER

1. General.

a. Small one- and two-burner gasoline cooking stoves are designed for the use of troops who prepare and cook their own food. These stoves are light to carry, easy to operate, and economical in fuel consumption. They are used extensively by mountain and jungle troops.



Figure 1.—Stove, cooking, gasoline, M1942, one-burner (65–H–2881).

b. Gasoline stove M1942, one-burner (stock No. 65–H–2881) (fig. 1) is a very small, compact, and efficient mechanism. If it is handled carefully it will give excellent service for a long time. Careless treatment, however, can quickly ruin it.

2. How to Light and Operate. (see figs. 2, 3, and 4)

a. To set up the N1942 stove, snap out the legs and raise the pot arms, allowing the ring on which they rest to slide out into position.

b. To clean the tip, turn the feed regulating wheel (see Fig. 2) under the burner to the right as far as it will go. (See *g* and *h* below.)

c. Turn the wheel to the left until it stops, closing the valve. (See fig. 4.)

d. Pump about 35 strokes with the air pump.

e. Open the valve slightly (turn the wheel to the right) and light the stove.

f. As soon as the flame becomes blue, turn the wheel one full turn to the right.

g. Pump air until the flame burns brightly. Later the heat of the flame may be reduced by turning the wheel to the right until the cleaner needle (see fig. 4) enters the opening in the burner.

h. If the flame flickers, clean the tip by turning the wheel to the right until it stops. This will put out the flame; turn the wheel back to the left and relight the stove.

i. Put out the flame by turning the feed regulating wheel to the left as far as it will go.

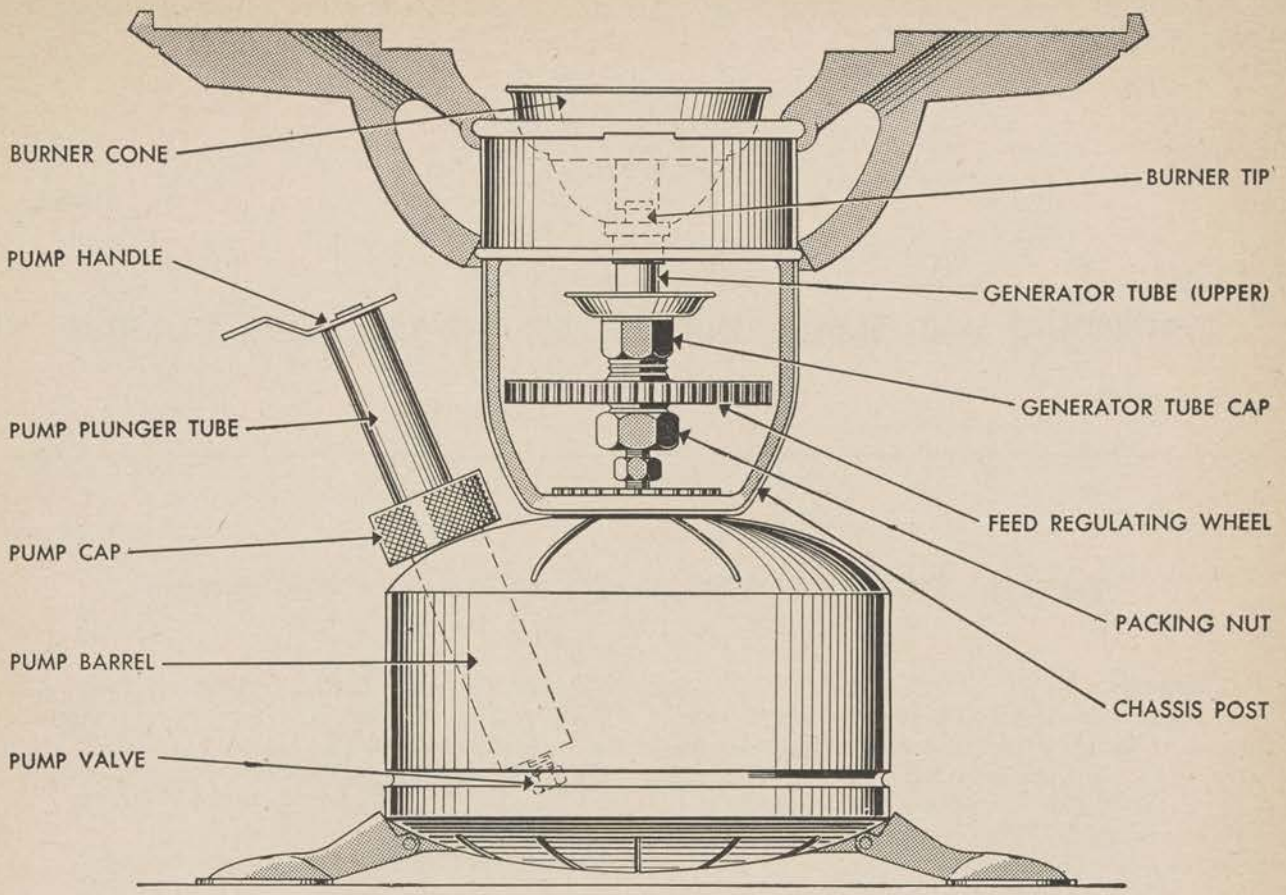

Figure 2. Detail of stove, cooking, gasoline, M1942, one-burner.

3. Maintenance (see figs. 2, 3, and 4)

a. Extra parts are carried in the pump plunger. When the plunger is pulled out, the pump handle may be unscrewed. The replacement parts are packing, pump cap gasket, generator screen, burner tip, generator tube and screens (upper), pump valve tip (rubber), and cleaner rod.

b. Maintenance instructions are outlined in the following table:

Condition	Action necessary	Steps to take
Poor flame (not corrected even after burner tip is cleaned).	Replacing generator. (Study figs. 2, 3, and 4).	1. Release the pressure by opening and retightening the pump cap. 2. Open the feed regulating wheel one turn. 3. Insert a screw driver or a similar tool between spokes of the wheel, valve body, and chassis post to prevent rotation of wheel when you are tightening or loosening any parts of the burner. 4. Unscrew the burner cone. 5. Loosen the generator tube cap and remove the upper generator tube with the screens. 6. Check the condition of the exposed cleaner needle. If the cleaner needle is bent, loosen the lock nut and unscrew the needle. 7. Obtain necessary replacement parts by unscrewing the pump handle from the pump plunger tube and taking the required parts out of the pump plunger tube. 8. Reassemble, using the spare parts. Always hold the feed regulating wheel so that it cannot turn when you are tightening or loosening any parts.

Condition	Action necessary	Steps to take
Gasoline leak at packing nut (not corrected even after packing nut is tightened).	Replacing packing. (Study figs. 2, 3, and 4.)	1. Follow steps 1, 2, and 3 as outlined above. 4. Loosen the packing nut. 5. Lift the feed regulating valve upward carefully. Turn it slightly left and right, at the same time exposing the cleaner needle and the packing. 6. Remove the snap ring and lift up the upper packing ring and packing. 7. Obtain spare packing. (See 7 above.) 8. Reassemble, using the spare packing. Be careful not to damage the point of the cleaner needle. When you are tightening or loosening any parts of the burner, hold the feed regulating wheel so that it cannot turn.
Gasoline leak at generator tube cap.	Tightening generator tube cap. (Study fig. 2.)	1. Follow steps 1, 2, and 3 as outlined above. 4. Tighten the generator tube cap.
Gasoline leak under pump cap (not corrected even after pump cap is tightened).	Replacing cap gasket. (Study figs. 2 and 4.)	1. Unscrew the pump cap and lift out the pump. 2. Unscrew the pump barrel from the pump cap. 3. Unscrew the pump handle from the pump plunger tube and remove the spare pump cap gasket. 4. Remove the old pump cap gasket from the top of the pump barrel and replace with spare gasket. 5. Reassemble the pump.
Gasoline leak between pump and pump plunger tube (not corrected even after pump cap is tightened.)	Replacing pump valve tip. (Study figs. 2, 3, and 4.)	1. Unscrew the pump cap and lift out the pump. 2. Unscrew the pump valve body. 3. Remove and inspect the valve tip. If the rubber is not worn or roughened, simply stretch the spring slightly and reassemble. 4. If the rubber is worn and rough, obtain the spare rubber tip from inside of the pump plunger tube and replace the old valve tip. 5. If a spare tip is not available, try carefully to remove the old tip and replace in it an inverted position. 6. Reassemble, with rubber against the hole in the pump barrel.
Pump not pumping.	Greasing and roughening of leather cup. (Study figs. 2, 3, and 4.)	1. Unscrew the pump cap and lift out the pump. 2. Unscrew the pump barrel from the pump cap. 3. Pull the pump plunger tube from the pump barrel. 4. Roughen up and grease the leather cup and reassemble.

4. General Hints and Precautions

a. To carry the M1942 cooking stove in the mountain cook set, nest the two pots, put the stove inside, and place the cover on top. To avoid all rattling, wrap the stove in some soft material. The 1-quart fuel container, which is issued separately, is not carried in the cook set.

b. Before packing the stove in the mountain cook set, cool the stove and be sure that the feed regulating wheel is turned all the way to the left. Loosen pump cap for a moment to let out vapor and then retighten.

c. Use nonleaded gasoline when it is available. If leaded gasoline is used, be sure to provide adequate ventilation in the room or tent to avoid harmful effect from fumes.

d. Do not fill the stove more than three-fourths full, or it will flare up when it is lighted and may burn nearby equipment.

e. When you use this or any other small stove outdoors, shield it carefully from the wind. The efficiency of these stoves is affected by even the slightest wind.

f. When the weather is cold or when a pot filled with snow is placed on the stove, combustion of the gasoline will not be complete and poisonous carbon monoxide will escape. In cold weather, therefore, there is special need for ventilation when the stove is burning. Regardless of the temperature, ventilators on the mountain tent must never be tied shut while the stove is in use. When snow is being melted, take care not to burn the pot. Put small amount of snow in the bottom of the pot, and keep pushing it down as more snow is added.

g. If something is boiling on the stove in cold weather, be sure to cover the pot; otherwise the steam will tend to condense as frost on the tent roof, wetting everything in the tent when it melts.

h. If cooking utensils have a gasoline odor, wash them thoroughly with hot water. In extreme instances, utensils may be inverted over the flame of the stove to burn out the odor. Special care must be taken however, to avoid melting the aluminum pot.

i. Keep enough air in the stove to produce a blue flame.

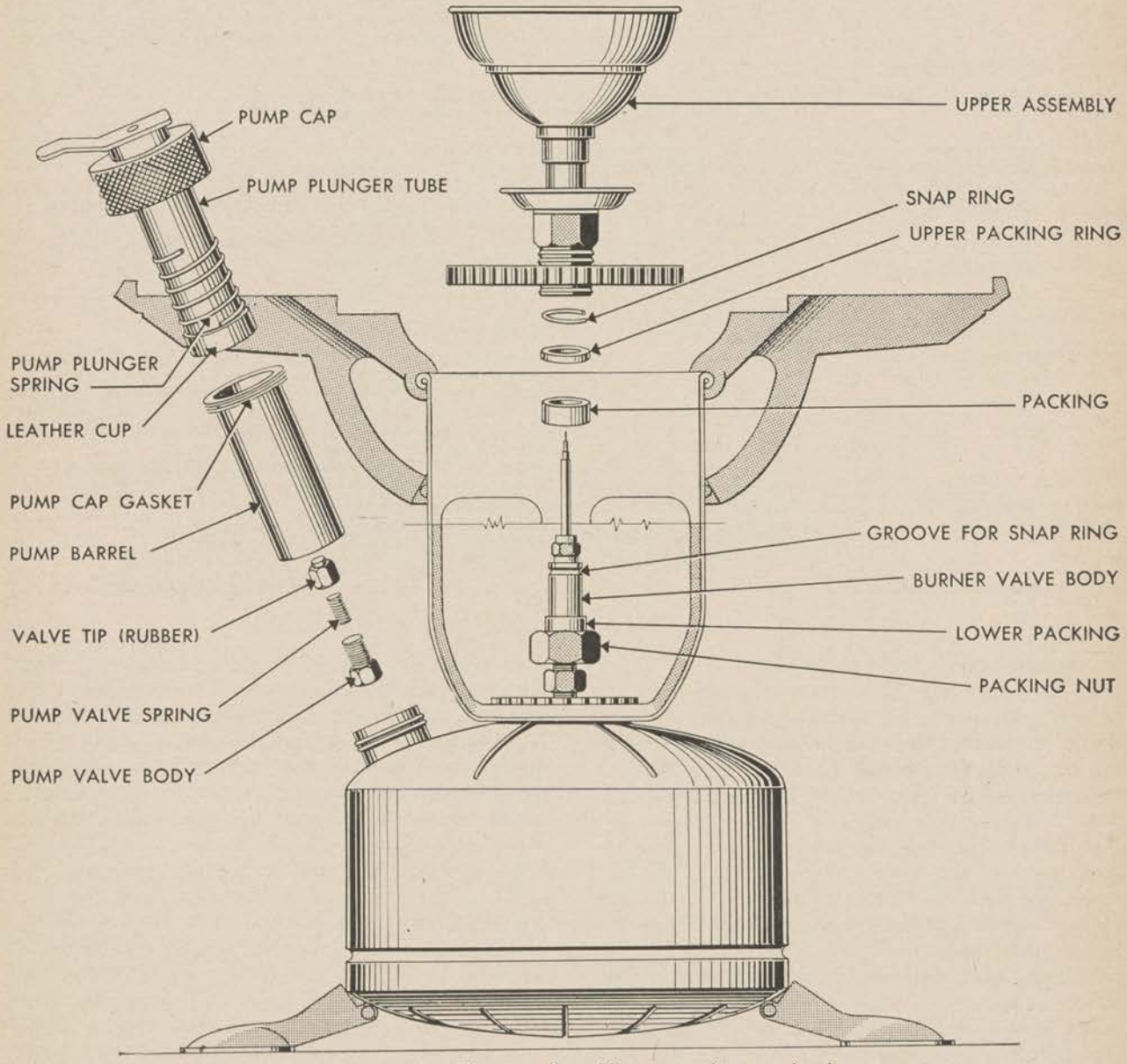

Figure 3. Detail of stove, cooking, gasoline, M1942, one-burner, showing spare parts.

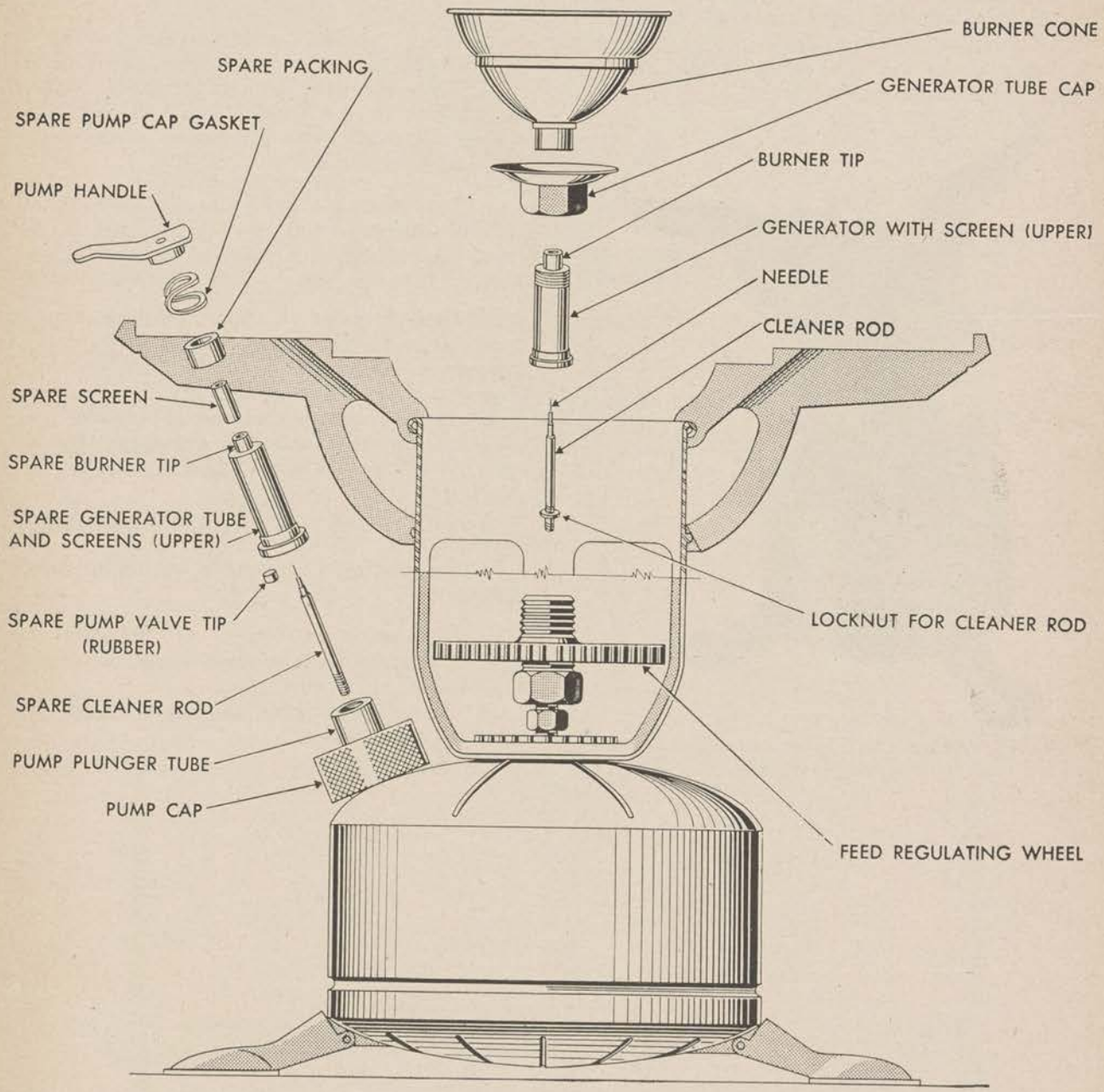

Figure 4. Detail of pump and burner assembly, stove, cooking, gasoline, M1942, one-burner.

j. In very high altitudes, use less than the normal amount of air pressure in the stove or the flame will tend to blow away from the burner.

5. Modified Type of Stove

a. GENERAL. Stove, cooking, gasoline, M1942, one-burner, modified (fig. 5), is a new type of the stove discussed in paragraphs 1 to 4 inclusive. It is issued under the same stock number, 65–H–2881, as the earlier model.

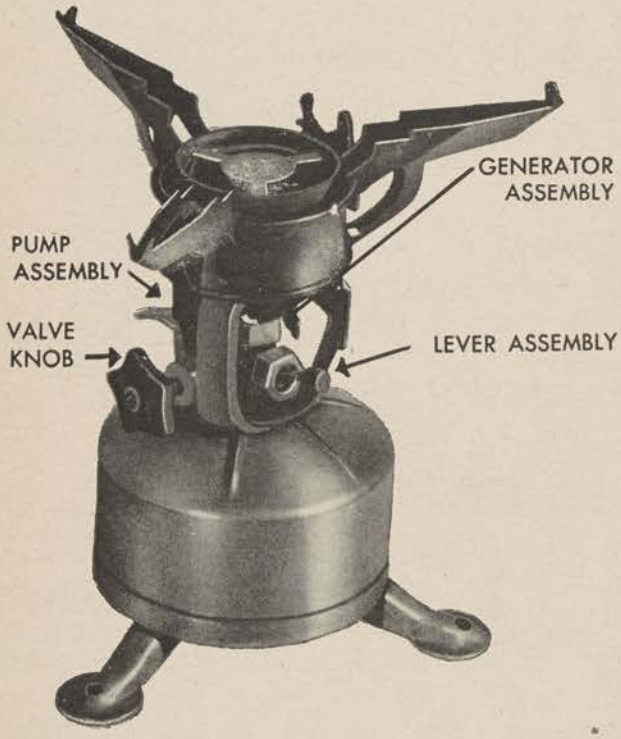

Figure 5. Stove, cooking, gasoline, M1942, one-burner, modified (65–H–2881).

b. HOW TO LIGHT AND OPERATE. (1) To light this stove (see figs. 5 and 6) fill the tank three-fourths full of gasoline and tighten the cap.

(2) Clean the tip by moving the cleaning lever down and up.

(3) Pump 20 to 30 strokes with the air pump (fig. 7).

(4) Turn the valve knob, opening the valve slightly to fill the priming cup three-fourths full.

(5) Close the valve and light the burner. When the gasoline in the priming cup is almost consumed, open the valve gradually to obtain the maximum blue flame.

c. HOW TO PACK. (1) Close the valve and allow the burner to go out.

(2) Loosen the pump cap to allow air to escape and then retighten.

d. MAINTENANCE. (1) Spare parts are carried in the pump barrel (see fig. 7) and in the holder attached to the frame. To obtain parts from the pump barrel, unscrew the pump grip.

(2) Spare parts for the generator assembly of this stove are interchangeable with those supplied for stove, cooking, gasoline, M1914, one burner. (See sec. II.)

(3) One wrench is clipped to the frame of each stove.

(4) See section I, appendix, for list of maintenance parts.

e. HINTS AND PRECAUTIONS. (1) Whenever the stove is operated in a confined space, be careful to provide adequate ventilation.

(2) Never disassemble the stove except for necessary maintenance.

(3) See paragraph 4.

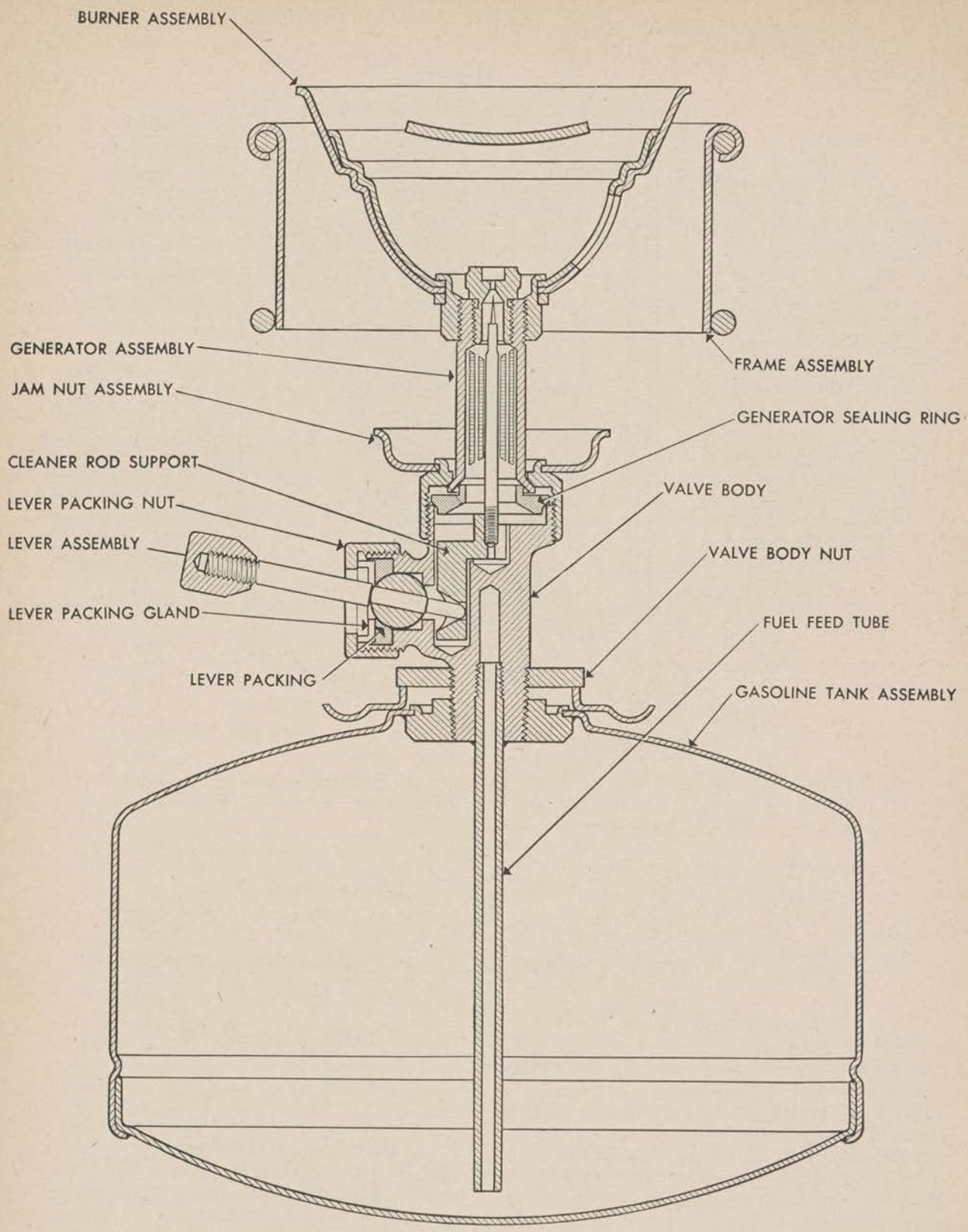

Figure 6. Cross section of stove, cooking, gasoline, M1942, one-burner, modified.

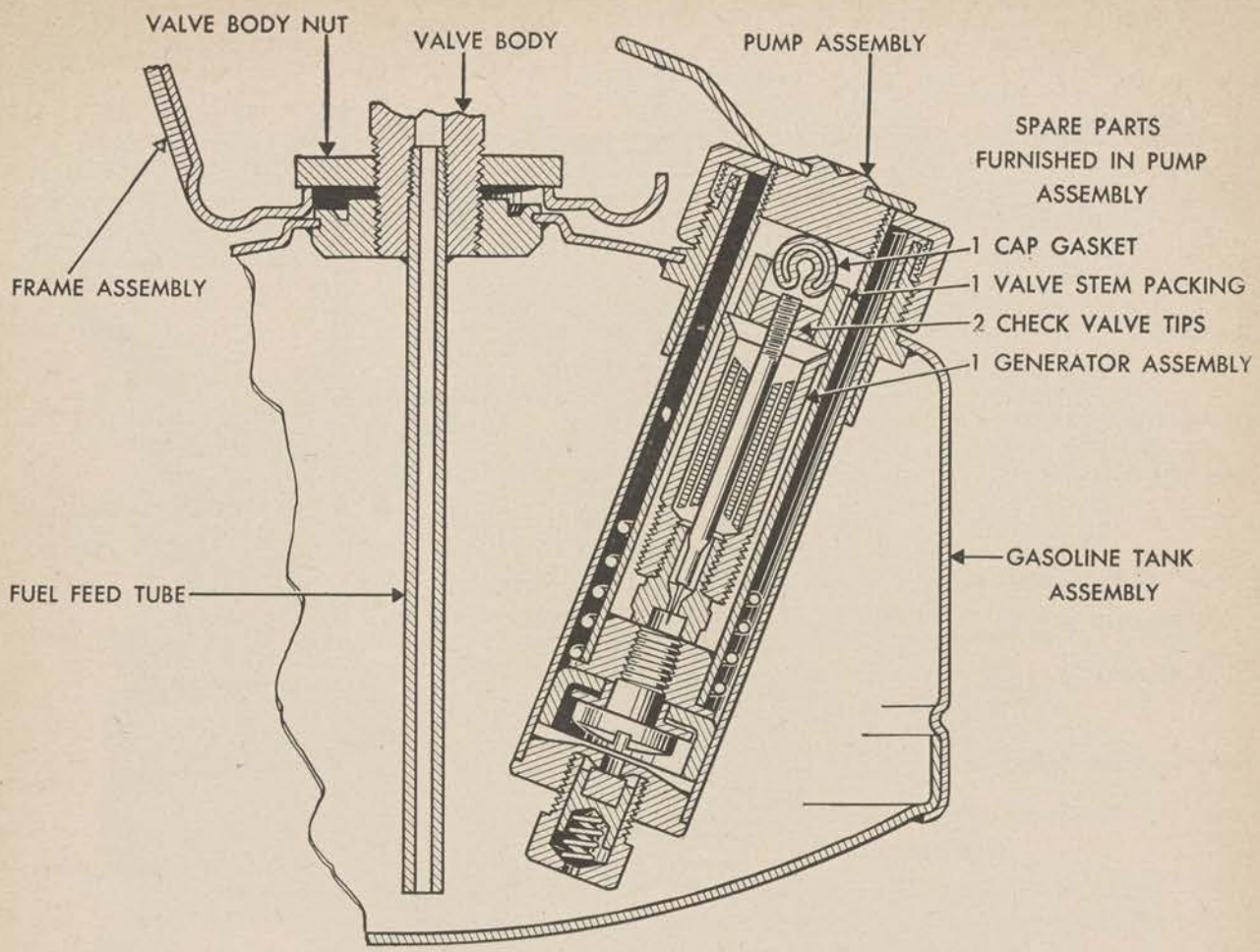

Figure 7. Detail of stove, cooking, gasoline, M1942, one-burner, modified, showing spare parts in pump assembly.

Section II. STOVE, COOKING, GASOLINE, M1941, ONE-BURNER

6. General

a. Gasoline cooking stove M1941, one-burner (stock No. 65–H–2880) (fig. 8) (topic of this section), and gasoline cooking stove M1942, two-burner (discussed briefly in sec. III), are equipped with the same type of heating mechanism. (See fig. 9 and sec. III.) The instructions contained in this section will, in general, apply equally well to either model.

b. The following items are issued with the stove (see fig. 8):

1 cup, utility, small.
1 cup, utility, large.
1 funnel.
1 wrench.
1 holder-assembly with spare parts.

c. The following instructions deal specifically with the one-burner stove; they will, however, be equally applicable to the same heating units when used with the two-burner stove. On the two-burner stove each burner is lighted and operated independently of the other.

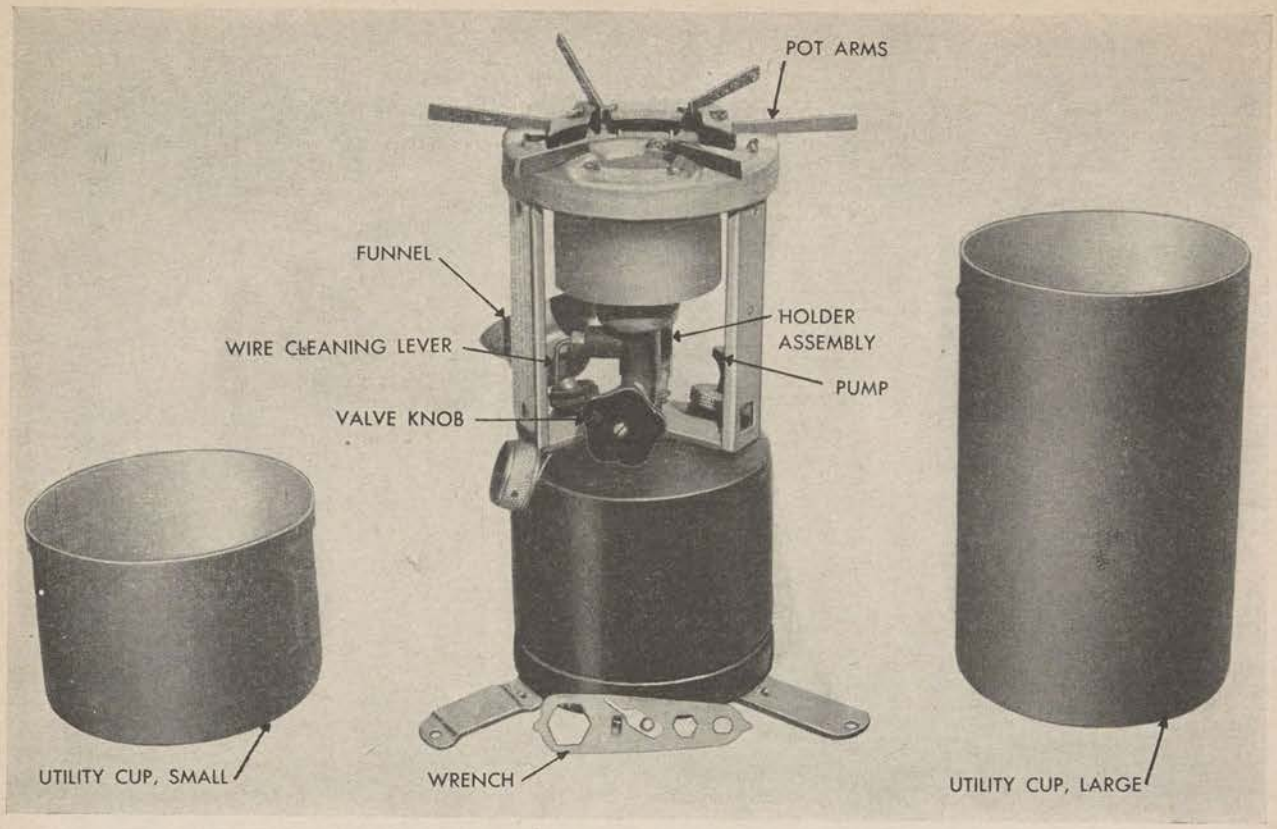

Figure 8. Stove, cooking, gasoline, M1941, one-burner (65-H-2880). (The utility cups form a container for the stove.)

7. How to Light and Operate (see figs. 9 and 10)

a. To set up the M1941 stove, remove it from the utility cups in which it is carried, and snap out the legs and the pot arms.

b. Unscrew the pump handle by turning it 2 turns to the left. Put your thumb over the hole in the top of the pump plunger and pump 25 to 35 times. Then push the pump plunger all the way in and screw it tight.

c. Turn the wire lever (see fig. 8) on the valve several times, to push the cleaning needle up through the orifice in the burner tip. This will clean the orifice. Leave the lever hanging in the "down" position.

d. Turn the valve knob a quarter turn to the left and light the stove by applying the match to the top of the burner.

e. After 3 or 4 minutes the yellow flame will subside and turn blue. Now turn the valve knob as far to the left as possible, and pump air into the stove until the flame burns vigorously. This will probably require from 15 to 30 more strokes of the pump.

f. If the flame is too hot, turn the wire lever to a horizontal position. Do not turn it too far upward or the flame will go out.

g. If the flame begins to flicker, twist the wire lever around a few times in order to clean the tip. This may put out the flame and necessitate relighting.

h. To put out the fire, close the valve by turning the valve knob as far to the right as it will go. Do not put out the flame by turning the wire lever straight up. (This would allow gasoline to leak out, making the stove difficult to light the next time.)

8. How to Make Repairs (see fig. 10)

There is an extra holder assembly containing spare parts attached to the inside of one of the stove uprights. If the stove is not working properly, proceed as follows:

a. Unscrew the crown of the burner by turning ing it to the left.

b. Unscrew the nut on the generator and remove the generator. If it is not in good condition, take out the roll of screening from the inside and insert one of the extra rolls.

c. If the cleaner needle is damaged, turn the

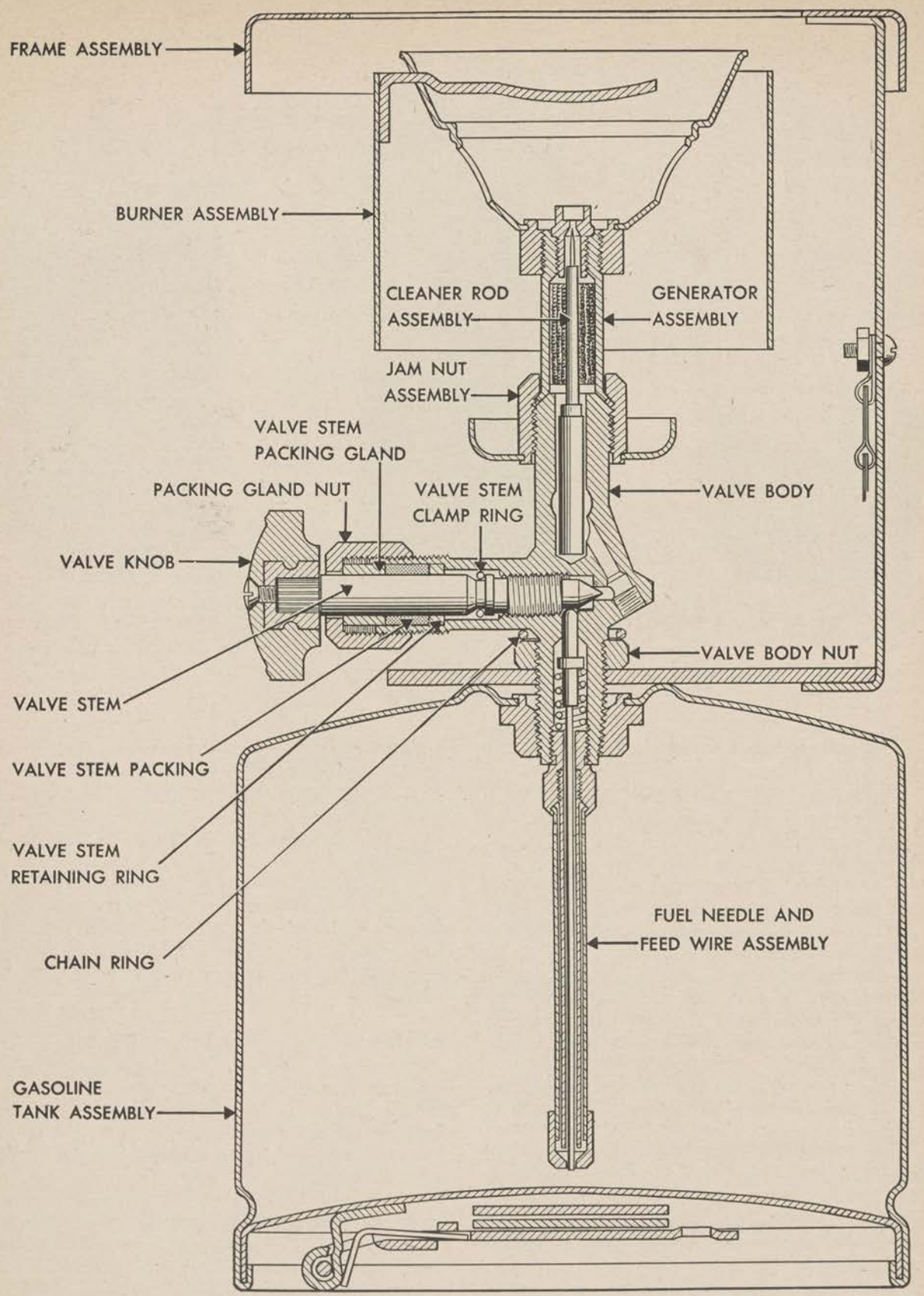

Figure 9. Detail of stove, cooking, gasoline, M1941, one-burner.

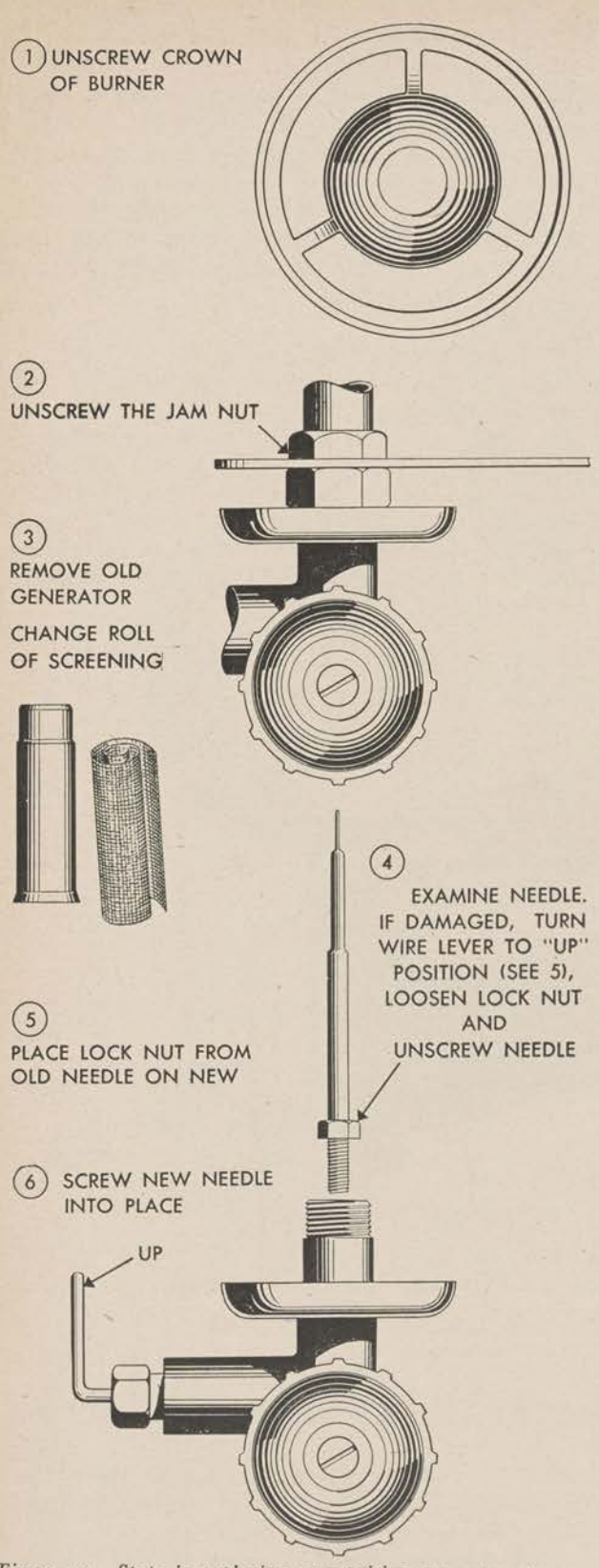

Figure 10. Steps in replacing or repairing generator, stove, cooking, gasoline, M1941, one-burner.

wire lever up; loosen the lock nut; and remove the needle.

d. Take the nut off the old needle and put it on the new needle; then screw the new needle into place. When the cleaning wire lever is up and the generator is attached, the point of the needle should extend about 1/16 inch through the opening.

e. Bolt the new generator into place and screw back the crown of the burner.

f. Clean the under side of the spider which fits over the burner by scraping it.

g. See section I, appendix, for a list of maintenance parts.

9. General Hints and Precautions

a. The two utility cups in which the stove is carried can be used as cooking utensils. Because of the six folding pot arms, the stove will also hold larger utensils.

b. If you are going to carry the stove with gasoline in it, first loosen the screw cap on the gasoline tank for a short time in order to release pressure and then retighten. Be sure that the valve is closed. Put the utility cup over the burner carefully so that it will not jam on the chain.

c. Oil the leather pump washer occasionally with light oil to keep it soft and pliable.

d. See *c* to *j* inclusive, paragraph 4.

e. Always keep the cover on the cook pot when cooking.

Section III. STOVE, COOKING, GASOLINE, M1942, TWO-BURNER

10. General

a. Gasoline cooking stove, M1942, two-burner (stock No. 65–H–2882), is substantially a double model of the M1941, one-burner. (See fig. 11.) The information and instructions given in section II above are also applicable to this stove.

b. Occasionally, an M1942 two-burner gasoline cooking stove may be found with burners similar to that in the M1942, one-burner (early model). The information and instructions given in paragraphs 1 to 4 inclusive are applicable to such stoves.

11. Precautions

a. The two-burner stove should never be used in a closely confined space where the tank will be subjected to any considerable degree of reflected heat from the walls of the protecting shield or container.

b. Ventilation must be provided when the unit is used indoors.

c. When tin-plated rather than aluminum cooking utensils are used, some baffle plate should be placed between the tin-plated container and the flame. This baffle plate may be the aluminum frying pan or any thin piece of metal or asbestos which may be available.

12. Maintenance

a. Two clips holding spare parts are attached to each two-burner stove.

b. One wrench is clipped to each two-burner stove using the M1941 burner assembly from the M1941 one-burner. In the event that the burner assembly from the M1942 one-burner stove is supplied, two different wrenches are furnished.

c. See section I, appendix, for a list of maintenance parts.

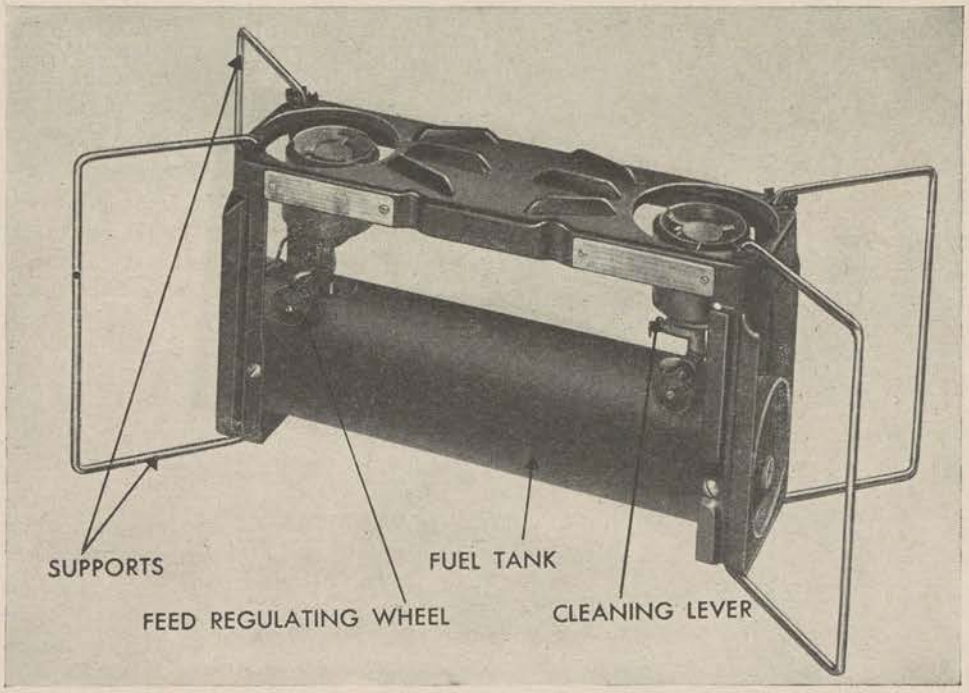

Figure 11. Stove, cooking, gasoline, M1942, two-burner (65–H–2882).

Section IV. OUTFITS, COOKING, USING GASOLINE STOVES, ONE- AND TWO-BURNER

13. Outfit, Cooking, One-burner (Stock No. 64–O–202)

a. COMPONENT PARTS. (1) The one-burner cooking outfit consists of the one-burner gasoline cooking stove, M1942 (stock No. 65–H–2881) (sec. I), and the mountain cook-set (stock No. 65–C–1145). See fig. 12.) A 1-quart fuel container may be requisitioned separately.

(2) The mountain cook-set consists of two nesting cooking pots and a frying pan, which is

also used as the cover for the cook-set. The outside pot has a diameter of 8 inches and the inside pot a diameter of 7 3/16 inches. Both pots are equipped with wire bails, and the frying pan is furnished with a handle which locks together all parts of the cook-set.

b. How to pack. To pack the outfit for carrying, place the small pot inside the larger one and put the stove inside the small pot. Cool the stove before packing it and be sure that the valve wheel is turned all the way to the left. Loosen the pump cap for a moment to let out vapor, and then retighten. To avoid any rattling, and to protect the pots from the odor of gasoline, wrap the stove in some soft material. Place the cover on the pots and fasten securely with the snap handle.

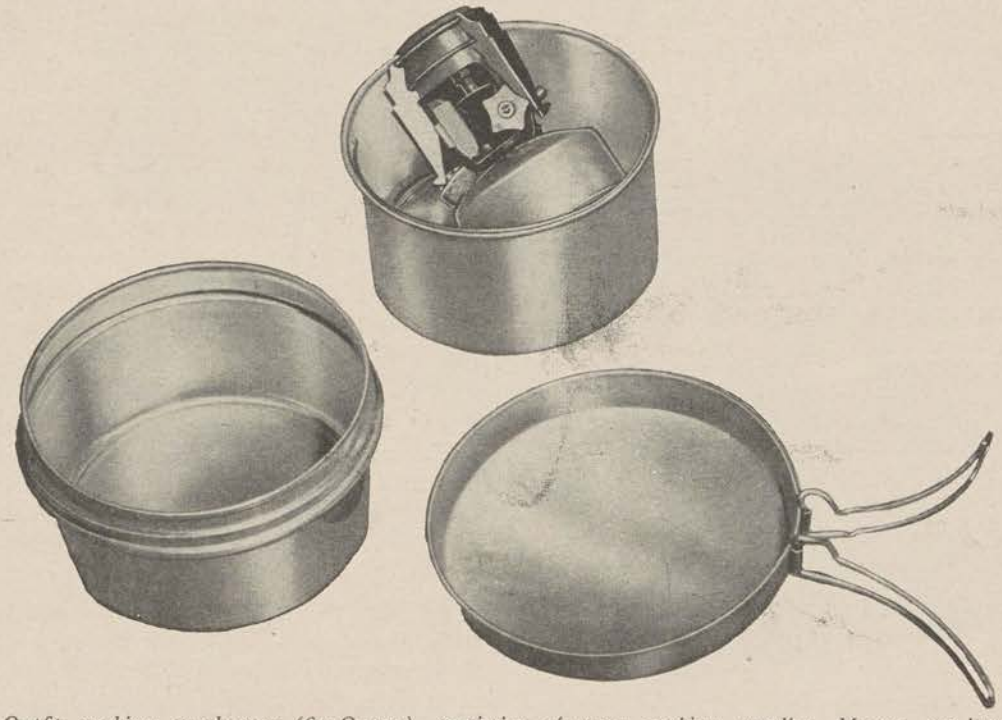

Figure 12. Outfit, cooking, one-burner (64–O–202), consisting of stove, cooking, gasoline, M1942, one-burner, modified (65–H–2881) and cookset, mountain (65–C–1145).

14. Outfit, Cooking, Two-burner (Stock No. 64–O–203)

a. Component parts. This outfit consists of the two-burner gasoline cooking stove, M1942 (stock No. 65–H–2882), and a carrying case (stock No. 65–H–1303). (See fig. 13.) The metal case, with cover, is 14½ inches by 8¾ inches by 14½ inches; it is provided with a hinged handle for easy carrying.

b. The stove. For information and instructions regarding the two-burner gasoline cooking stove M1942, see section III.

15. Outfit, Cooking, 20-man (Stock No. 64–O–300)

a. Component parts. This outfit (see fig. 14) consists of the following items:

Item No.	Stock No.	Components	Quantity
1	64–B–25	Bag, carrying, canvas, outfit, cooking, 20-man	1
2	64–B–35	Bag, cutlery, canvas	1
3	64–B–125	Bag, utensils, nesting, canvas, outfit, cooking, 20-man	1
4	38–B–3630	Brush, scrubbing, floor, hand (palmetto or palmyra fiber)	1
5	65–H–1303	Case, stove, cooking, gasoline, M–1942, 2-burner	2
6	64–D–200	Dipper, 1-quart	1
7	64–F–275	Fork, cook, flesh, length 15″	1
8	64–K–545	Knife, butcher, 10″ blade	1
9	64–K–660	Knife, paring	2
10	64–L–150	Ladle, 15″ (overall)	1
11	64–O–130	Opener, can, hand	2
12	64–R–800	Roll, cutlery, canvas	1
13	64–S–505	Shaker, pepper, aluminum, cooks'	1
14	64–S–510	Shaker, salt, aluminum, cooks'	1

Item No.	Stock No.	Components	Quantity
15	64–S–1000	Spoon, basting, length 15″	1
16	41–S–5227	Stone, sharpening, pocket (3½″ x 1¼″ x 13/16″)	1
17	65–H–2882	Stove, cooking, gasoline, M–1942, 2-burner	2
18	64–T–579	Turner, cake, length 15″	1
19	64–U–600	Utensils, cooking, nesting, for outfit, cooking, 20-man (consists of the following):	
20	64–P–668	Pan, frying, outfit, cooking, 20-man, with-folding-handle, 10¼″ diameter	2
21	64–P–2110	Pot, cooking, outfit, cooking, 20-man, w/cover, 4-quart	1
22	64–P–2112	Pot, cooking, outfit, cooking, 20-man, w/cover, 5¾-quart	1
23	64–P–2114	Pot, cooking, outfit, cooking, 20-man, w/cover, 8-quart	1
24	64–P–2116	Pot, cooking, outfit, cooking, 20-man, w/cover, 11-quart	1



Figure 13. Outfit, cooking, two-burner (64–O–203), consisting of stove, cooking, gasoline, M1942, two-burner (65–H–2882) and case, carrying (65–H–1303).

b. THE STOVE. For details of the stoves and cases included in this outfit, see section III and paragraph 14.

c. HOW TO PACK. (see fig. 15). (1) Lock each stove into its case.

(2) Place one stove and case inside the large canvas carrying bag, lengthwise, at the rear. (Have the handle of the bag at the top.) Place the second stove and case on top of the first.

(3) Place the fork, knives, can openers, spoon and sharpening stone into the cutlery roll, and put roll into cutlery bag. Also put into cutlery bag the brush, dipper, ladle, salt and pepper shakers and cake turner. Lay the cutlery bag on top of the stoves.

(4) Nest the four cooking pots and lids. Then nest all pots and lids in the frying pans, one pan at the top and one at the bottom.

(5) Tie all nested utensils into the utensil bag and place this bag inside the carrying bag, at the front.

(6) Tie the carrying bag securely.

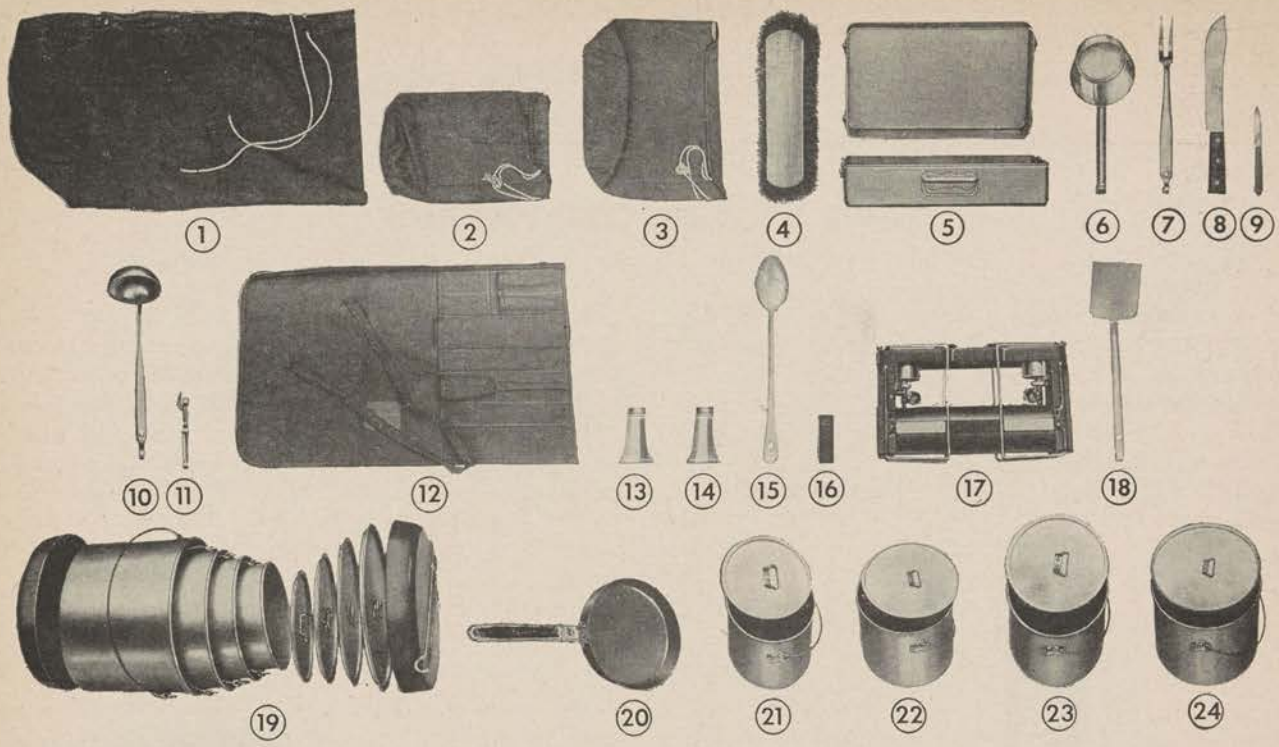

Figure 14. Outfit, cooking, 20-man (64–O–300).

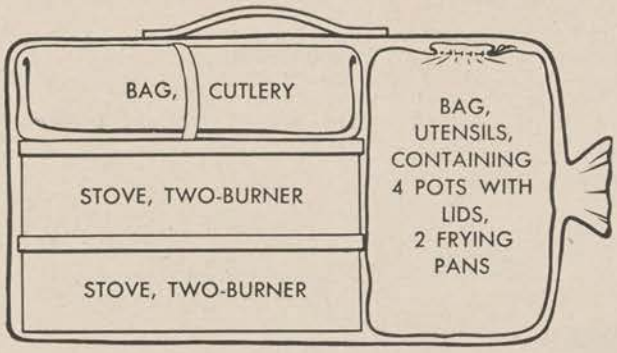

Figure 15. Outfit, cooking, 20-man, packed in canvas carrying bag.

CHAPTER 2

COOKING OUTFITS AND STOVE EXPEDIENTS

Section I. OUTFIT, COOKING, PACK

16. General

a. The pack cooking outfit (stock No. 64–O–214) (see fig. 16) has been designed to replace the earlier cavalry pack cooking outfit and the mountain artillery cooking outfit. (See pars. 26 and 27.) The new outfit may be operated with gasoline, kerosene, fuel oil, or crankcase drippings, or if necessary, it may be fired with wood.

b. Each pack consists of one unit, designed for the use of 40 men. The outfit is carried by a pack animal, using the Phillips packsaddle, with the range and accessories on one side and the two cans on the other. If necessary, the outfit can also be broken down into lightweight loads which may be strapped onto packboards for man transport.

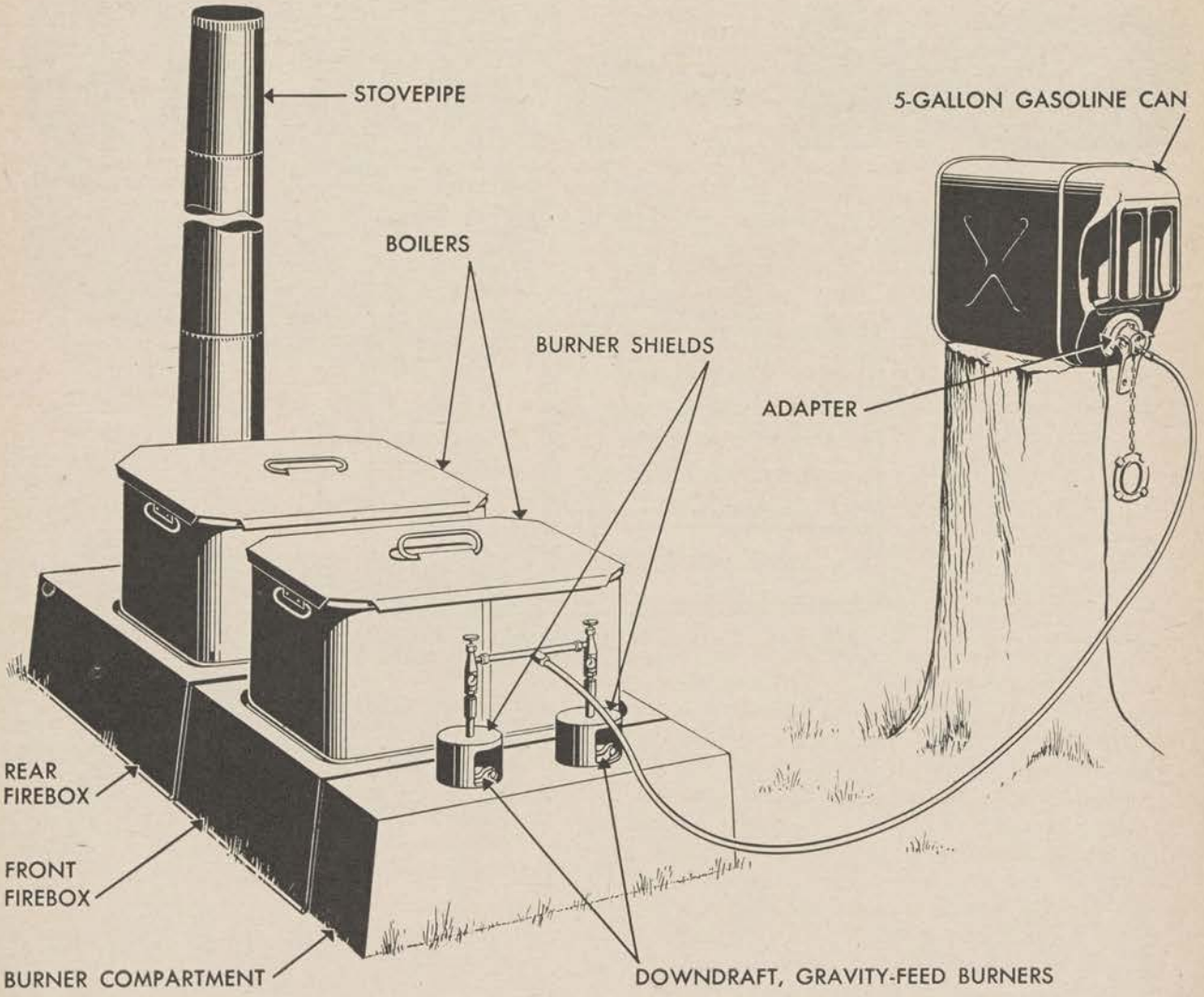

Figure 16. Outfit, cooking, pack (64–O–214) assembled for operation. Fuel container is placedat higher level than burners to provide gravity-feed.

17. Component Parts

a. Each outfit may be divided into three major parts:

(1) The range and its accessories.

(2) The utensils.

(3) The tool and maintenance set.

b. The components of the outfit (see fig. 17) are itemized below:

Item No.	Stock No.	Components	Quantity
		RANGE, FIELD, OUTFIT, COOKING, PACK	
1	65–H–1002	Adapter, gravity feed, 5-gallon gasoline can	1
2	65–H–1187	Box, fire, range, field, outfit, cooking, pack, front	1
3	65–H–1188	Box, fire, range, field, outfit, cooking, pack, rear	1
4	65–H–1238	Burner, downdraft, 3¼″ diameter (w/fittings and flame shield)	2
5	65–H–1399	Compartment, burner, range, field, outfit, cooking, pack	1
	65–H–1495	Extension, stove-pipe, range, field, outfit, cooking, pack	2
6	33–H–470	Hose, gasoline, slip-on-type	1
7	65–H–2030	Manifold, fuel feed, range, field, outfit, cooking, pack (with 2 valves, drip)	1
8	65–H–2320–30	Pipe, stove, joint or section, tapered, 6″, nested	1
		UTENSILS, OUTFIT, COOKING, PACK	
9	64–B–35	Bag, cutlery, canvas	1
10	64–B–910	Boiler, outfit, cooking, pack, with cover #60	1
11	64–B–915	Boiler, outfit, cooking, pack, with cover #51	1
12	38–B–3630	Brush, scrubbing, floor, hand (palmetto or palmyra fiber)	1
13	64–D–200	Dipper, 1 quart	1
14	64–F–275	Fork, cook, flesh, length 15″	1
15	64–K–545	Knife, butcher, 10″ blade	1
16	64–K–660	Knife, paring	2
17	64–L–150	Ladle, 15″ (overall)	1
18	64–O–130	Opener, can, hand	2
19	64–P–386	Pan, bake-and-roasting, 4½″ x 15½″ x 17½″, #52, bottom	1
20	64–P–387	Pan, bake-and-roasting, 4½″ x 15½″ x 17½″, #52, top	1
21	64–R–800	Roll, cutlery, canvas	1
22	64–S–505	Shaker, pepper, cooks'	1
23	64–S–510	Shaker, salt, cooks'	1
24	64–S–1000	Spoon, basting, length 15″	1
25	41–S–5227	Stone, sharpening, pocket (3½″ x 1¼″ x 13/16″	1
26	64–T–579	Turner, cake, length 15″	1
		TOOLS AND MAINTENANCE PARTS	
27	24–B–1105	Bag, canvas, tools and maintenance parts, stove, cooking, outfits	1
28	43–B–23862	Bolt, stove, steel, N.C.T.S., oval countersunk head, without nut, class 1 fit, 3/16″ x ¾″	12
	65–H–1240	Burner, downdraft, 3¼″ diameter (without fittings)	1
	33–F–1000	Fittings, hose, gasoline, slip-on-type	1 pr.
29	64–H–210	Hanger, outfit, cooking, pack	1
30	33–H–470	Hose, gasoline, slip-on-type	1
		List of instructions (operation and maintenance)	1
31	43–H–11398	Nuts, wing, steel, threaded, N.C.T.S., 3/16″	12
32	65–H–3695	Valve, drip, burner, downdraft, plain outlet	1
33	65–H–3715	Washer, adapter, gravity feed, 5-gallon gasoline can	1
34	65–H–3825	Wrench, oil burner, (3 to set)	1 set

18. How to Assemble Range (see fig. 16)

a. Choose a level spot of ground protected from the wind, where loose earth is available.

b. Place the rear section of the firebox on the ground with the stack end down wind. Attach the front section of the firebox to this by inserting its flanges into the grooves of the rear section. Attach the burner compartment to the front section in a similar manner.

c. Erect the five sections of telescoping smokestack. If a greater draft is desired, add the two sections of standard stack. The order of building up the stack with the extensions is as follows:

(1) Base tapered section (large).

(2) Straight section (large).

(3) Second tapered section.

(4) Straight section (small).

(5) Remaining tapered section, in proper sequence.

d. Pack earth 3 inches high on all sides of range.

e. Insert the burners (with flame shields) into the holes in the burner compartment and attach the manifold. Be certain that the valves are shut off.

f. Screw the adapter into the fuel can, and clamp the hose to the adapter and to the fitting between the drip valves. Hold the center clamp on the adapter to prevent its turning, and then lock the clamp down. Be certain to dry off the

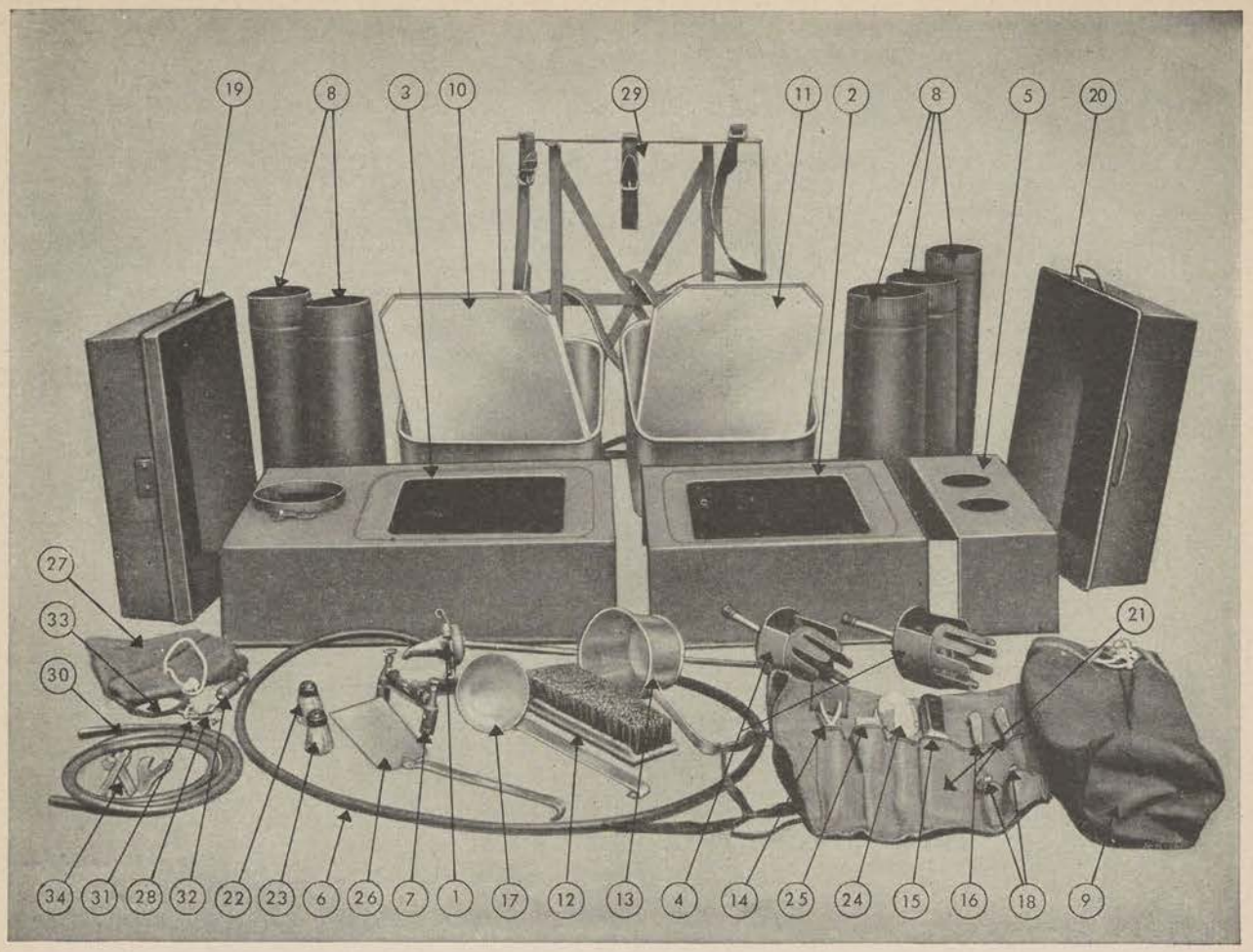

Figure 17. Components and accessories outfit, cooking, pack.

adapter, gasket, and the gasket seat before you insert and tighten the adapter. This will prevent the gasket from squeezing out of place.

Note: The fittings provided at each end of the hose may be permanently attached to the burner manifold and to the adapter, eliminating the necessity of threading and unthreading these fittings.

g. Place the fuel can on its side at least 18 inches above burner level, and make certain that it is secure. If no other support is available, turn the hanger on edge and rest the can on this; be sure that both the hanger and the can are secure before lighting the range. In the event that the fuel can is not available or that the adapter breaks, fuel can be siphoned from any available container.

19. Operation and Maintenance

a. Operation. Heat for the range is normally furnished by two down-draft, gravity-feed burners (fig. 18). Principal parts of the burner are the burner top plate and the vaporizer, a cylindrical part with fingerlike projections. The range will burn approximately 2/3 gallon of gasoline per hour or 4/5 gallon of kerosene or fuel oil.

(1) Fill the two boilers with water or food and place them in position on the range.

(2) Open one drip valve and start the fuel dripping slowly. When fuel appears around the edge of the burner, light with a match.

Caution: Do not have your face or hands directly over the burner when you are lighting it. Be particularly careful when relighting a hot burner. If fuel has leaked on the ground, it is best to remove the first boiler before you light the burners, in order to avoid a possible back flash.

(3) If gasoline is being used, open the second drip valve and the other burner will light automatically. If kerosene or fuel oil is being used, it is best to ignite an oil-soaked rag or piece of paper below each burner before turning on the fuel.

(4) Keep the fuel valves open to a drip flow for

about 4 minutes, to give the burners time to heat. When gasoline is used, proper adjustment of the valves should eliminate smoke completely after this initial heating period.

(5) When operating properly, the burners have a slight roaring sound and should be able to take almost solid streams of gasoline without smoking.

Important. If the burners will not operate in this manner, check for air leaks around the bottom of the range or under the pots. Close all such leaks.

(6) The fuel rate to both burners must be equal at all times. If less heat is desired, turn down both burners.

(7) Adjust the drip valves frequently to maintain maximum equal feeding without smoke.

(8) Before shifting the boilers from front to back, and before removing a boiler from the range, throttle the drip valves to a slow drip in order to avoid a flare-up.

(9) Five gallons of water should boil in 20 to 30 minutes at the burner end, and in about twice that time at the stack end. Baking and roasting are best accomplished at the stack end. Keep the boilers covered as much as possible.

(10) Always shield the range from the wind.

b. MAINTENANCE. (1) At least once a week take the burner apart by removing the three wing nuts and bolts. Scrape the parts thoroughly with a screw driver or a wire brush, removing any hard substances between the burner top and bottom. If tools are not available, rotate the burner surfaces on dry earth.

(2) Keep the burner box and the stack clean.

(3) Clean pot bottoms carefully before nesting the pots.

Important: Take particular pains when leaded gasoline is used, since some lead (poison) may be present in the soot.

(4) Avoid contamination of food with any particles of soot from any part of the burner outfit, especially when leaded gasoline is used.

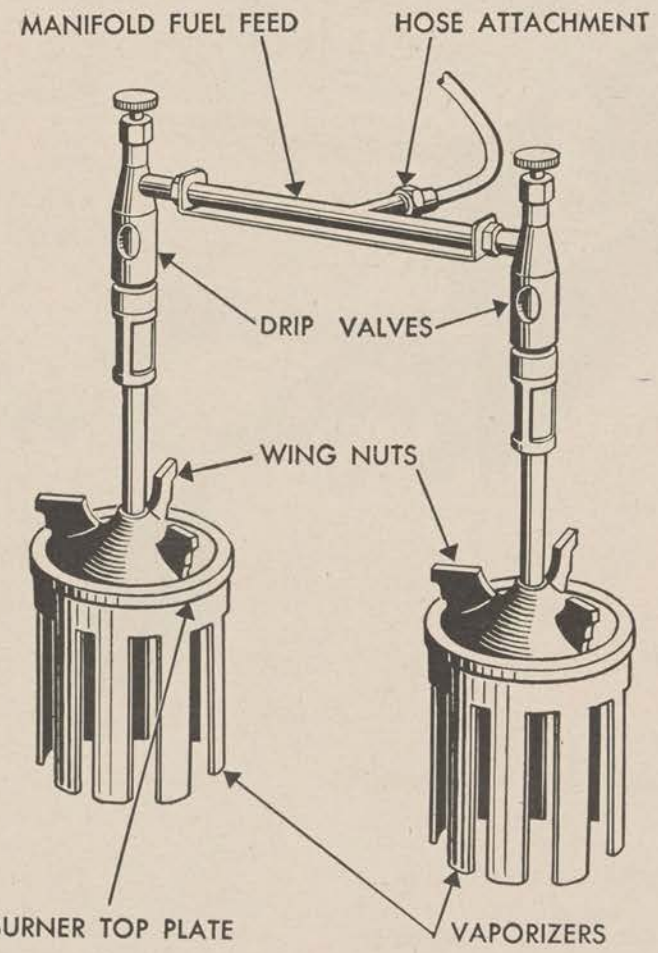

Figure 18. Burners, downdraft, gravity-feed.

(5) Straighten the pot seats occasionally to maintain airtightness.

(6) See section II, appendix, for a list of parts for mechanical maintenance.

c. Using a Wood Fire. (see fig. 19). (1) Assemble the range without the burner section.

(2) Dig a trench 3 or 4 inches deep and 15 inches wide under the front section of the firebox.

(3) Build a fire in the trench, keeping it toward the front.

(4) The burner section may be used as a windshield or as a draft control.

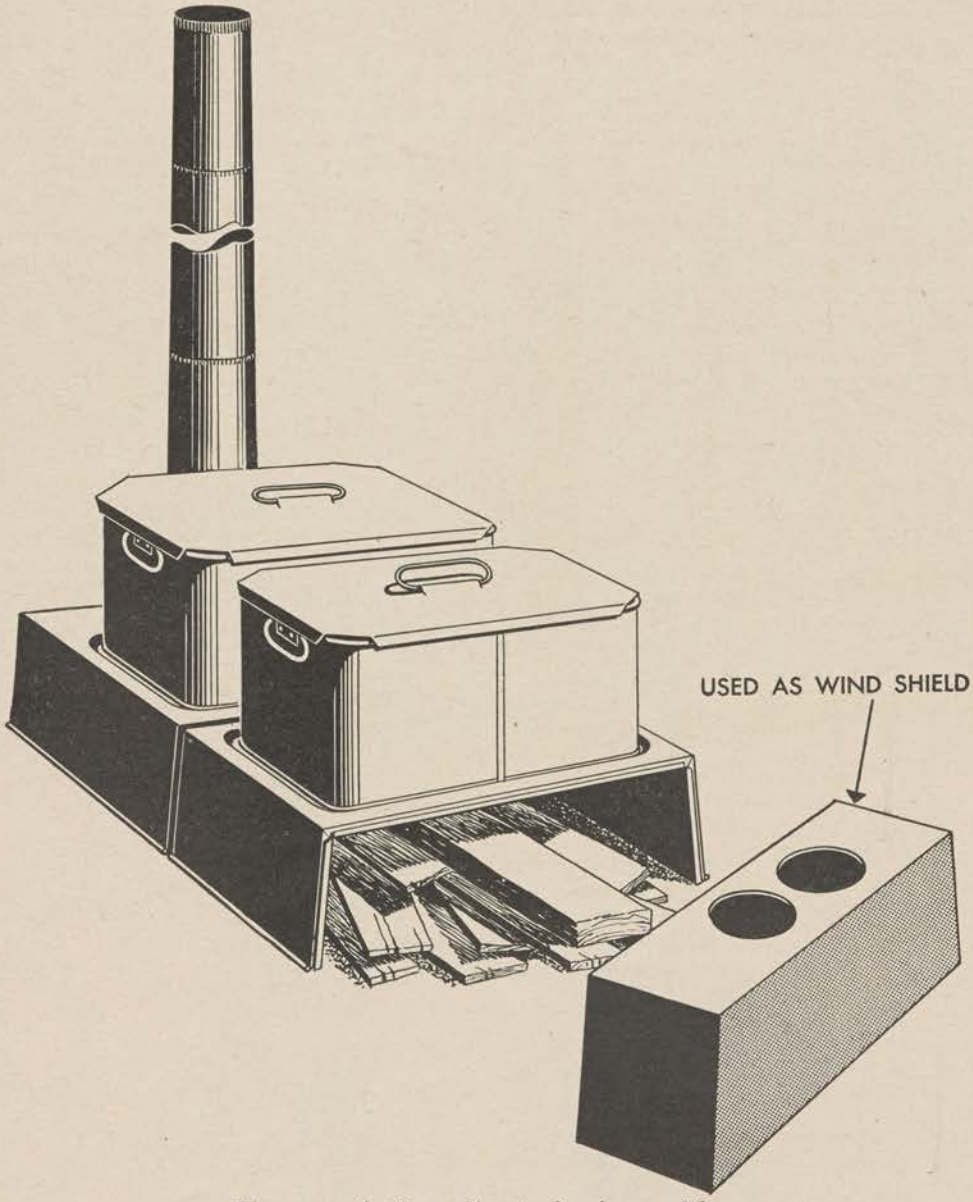

Figure 19. Outfit, cooking, pack, using wood fire.

20. How to Pack Outfit for Transportation

(see fig. 20)

Each unit is packed in the following manner:

a. Place the outfit hanger on the ground, open side up.

b. Place the rear section of the firebox inside the hanger.

c. Place the front section of the firebox and the burner compartment into the rear section of the firebox.

d. Place the bake and roasting pan in the front section of the firebox.

e. Pack the burners and the hose into smokestack, and place the telescoped smokestack in the

burner compartment. Place the manifold and the gas-can adapter inside the small boiler.

f. Place the small boiler into the larger one and insert both boilers into the bake and roasting pan.

g. Place the fork, knives, can openers, spoon and sharpening stone into the cutlery roll and put roll into cutlery bag. Also put into cutlery bag the brush, dipper, ladle, salt and pepper shakers and cake turner. Pack tooks and maintenance parts into the tool bag. Place the cutlery bag and the tool bag into small boiler.

h. Place boiler covers over boilers, and place roasting-pan cover over these.

i. Secure all parts in hanger with leather straps, The two lengths of standard extension smokestack must be secured to the pack as a top load.

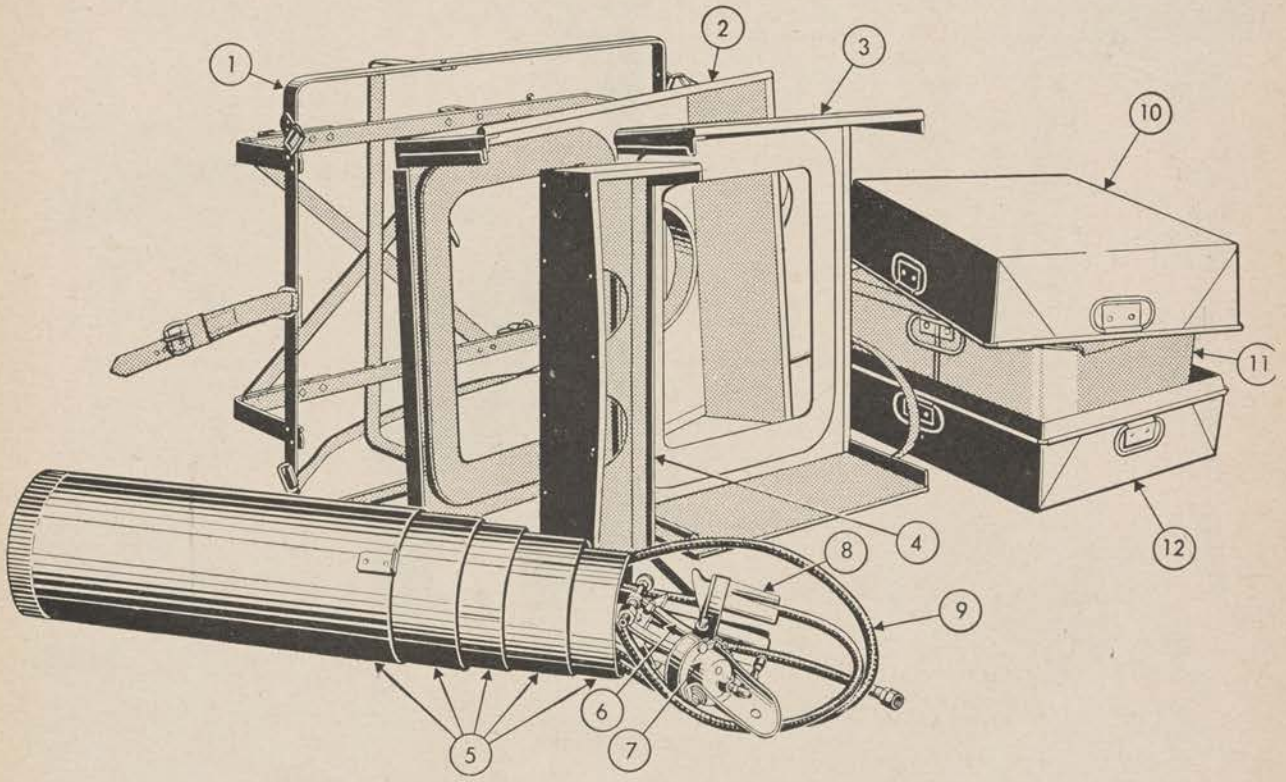

1. 64-H-210	*Hanger.*	*7. 65-H-1002*	*Adapter.*
2. 65-H-1188	*Box, fire, rear.*	*8. 65-H-1238*	*Burner.*
3. 65-H-1187	*Box, fire, front.*	*9. 33-H-470*	*Hose.*
4. 65-H-1399	*Compartment, burner.*	*10. 64-P-387*	*Pan, top.*
5. 65-H-2320-30	*Pipe, stove.*	*11. 64-B-910 and 64-B-915*	*Boilers.*
6. 65-H-2030	*Manifold.*	*12. 64-P-386*	*Pan, bottom.*

Figure 20. Method of stowing outfit, cooking, pack. Utensils and maintenance parts are placed inside nested boilers.

Section II. OUTFIT, COOKING, SMALL DETACHMENT

21. General

a. The small detachment cooking outfit (stock No. 64–O–270), (see fig. 21), is designed for the use of isolated detachments of troops numbering from 15 to 40. The unit, which is light and compact, may be easily carried in any vehicle. So that 2 men may transport the unit by packboard, it is split into 2 sections, each weighing approximately 40 pounds. A third man carries the 5-gallon fuel container also strapped to a packboard.

b. The lower (burner) section of the stove is well insulated on bottom and sides. A central baffle plate causes the heat to circulate throughout the stove. (See fig. 25.) The upper section consists of a windshield and a cover which locks to it. When the stove is carried on a packboard, this cover locks over the lower section.

c. Heat for the stove is furnished by one down-

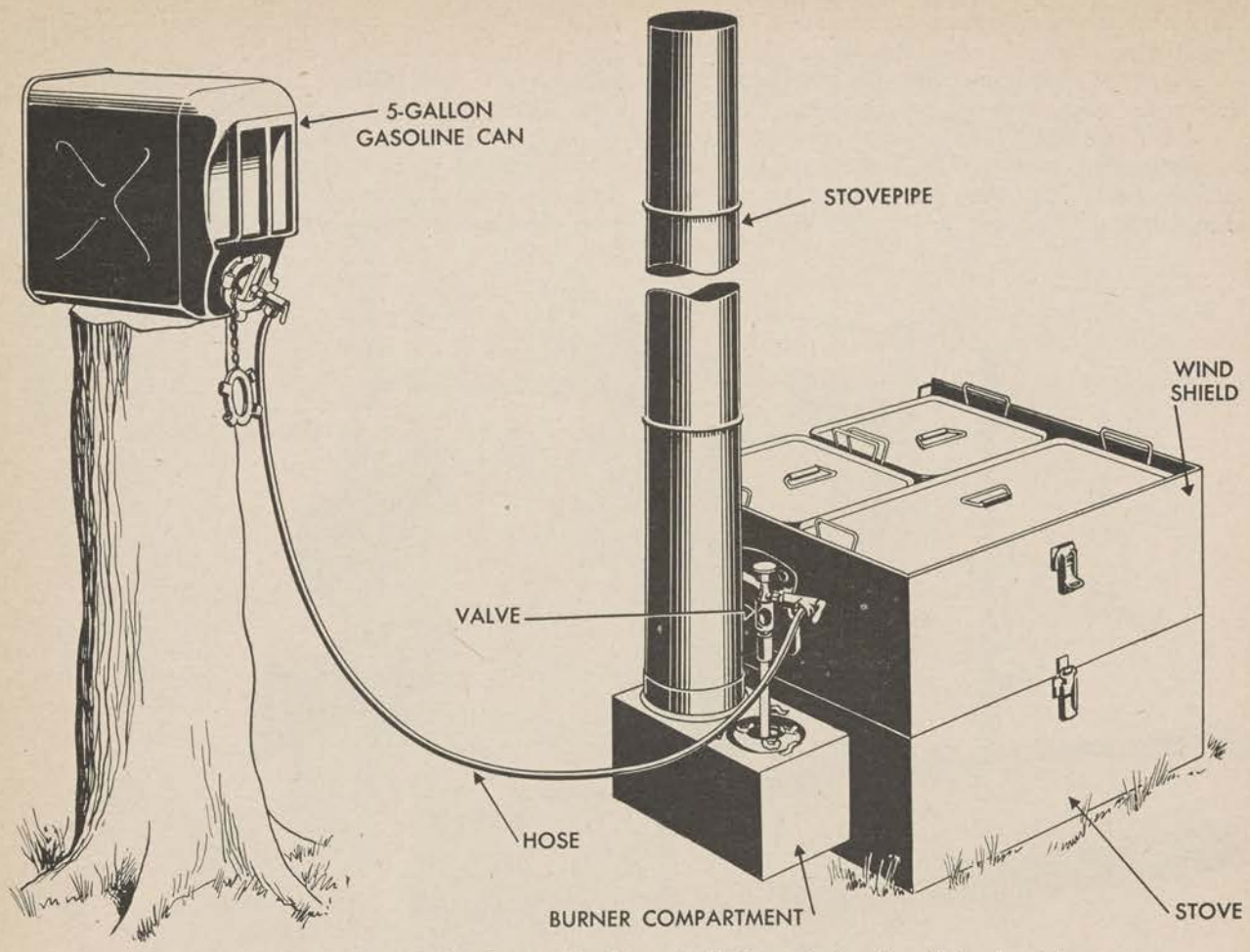

Figure 21. Outfit, cooking, small detachment (64–O–270). Fuel can is placed at higher level than stove to provide gravity-feed.

draft, gravity-feed burner, similar to those used with the outfit, cooking, pack. (See par. 19 and fig. 18.)

22. Component Parts

Following is a list of the component parts (see fig. 22) of the outfit, cooking, small detachment:

Item No.	Stock No.	Components	Quantity
1	65–H–1002	Adapter, gravity feed, 5-gallon gasoline can	1
2	65–H–1239	Burner, downdraft, 3¼" diameter (with valve, drip and flame shield)	1
3	33–H–470	Hose, gasoline, slip-on type	1
4	64–P–667–55	Pan, frying, outfit, cooking, small detachment	2
5	64–P–1180	Pan, sterilizing, outfit, cooking, small detachment with cover	1
6	65–H–2310	Pipe, stove, joint or section taper, 4½" nested	1
		Pot, cooking, outfit, cooking, small detachment, with cover,	
7	64–P–2103	6-quart	2
8	64–P–2104	11-quart	1
9	64–P–2105	13½-quart	1
10	65–H–2990	Stove, outfit, cooking, small detachment	1
		UTENSILS, OUTFIT, COOKING, SMALL DETACHMENT	
11	64–B–35	Bag, cutlery, canvas	1
		(Contents of bag)	
12	38–B–3630	Brush, scrubbing, floor, hand (palmetto or palmyra fiber)	1
13	64–D–200	Dipper, 1-quart	1

Item No.	Stock No.	Components	Quantity
14	64–L–150	Ladle, 15″ (overall)	1
15	64–S–505	Shaker, pepper, cooks'	1
16	64–S–510	Shaker, salt, cooks'	1
17	64–T–579	Turner, cake, length 15″	1
18	64–R–800	Roll, cutlery, canvas	1
		(Contents of roll)	
19	64–F–275	Fork, cook, flesh, length 15″	1
20	64–K–545	Knife, butcher, 10″ blade	1
21	64–K–660	Knife, paring	2
22	64–O–130	Opener, can, hand	2
23	64–S–1000	Spoon, basting, length 15″	1
24	41–S–5227	Stone, sharpening, pocket (3½″ x 1¼″ x 13/16″)	1
		TOOLS AND MAINTENANCE PARTS	
25	24–B–1105	Bag, canvas, tools and maintenance parts, stove, cooking outfits	1
		(Contents of bag)	
26	43–B–23722	Bolt, stove, steel, N.C.T.S., flat head, without nuts, class 1 fit, 3/16″ x ¾″	6
27	33–F–1000	Fittings, hose, gasoline, slip-on type	1 pr.
28	33–H–470	Hose, gasoline, slip-on-type	1
29	43–N–11398	Nuts, wing, steel, threaded, N.C.T.S., 3/16″	6
30	65–H–3696	Valve, drip, burner, downdraft, screw outlet	1
31	65–H–3715	Washer, adapter, gravity feed, 5-gallon gasoline can	1
32	65–H–3825	Wrenches, oil burner (3 to set)	1 set
		List of instructions (operation and maintenance)	1

23. How to Assemble (see fig. 21)

a. Place the lower section of the stove on the ground and lock the windshield to it. If the stove is used on a wooden floor, place it on stones or on a bed of sand or dirt. To facilitate frying operations (see fig. 22), one side of the windshield folds down. The stove can be assembled so that this folding side is on either the burner side or the

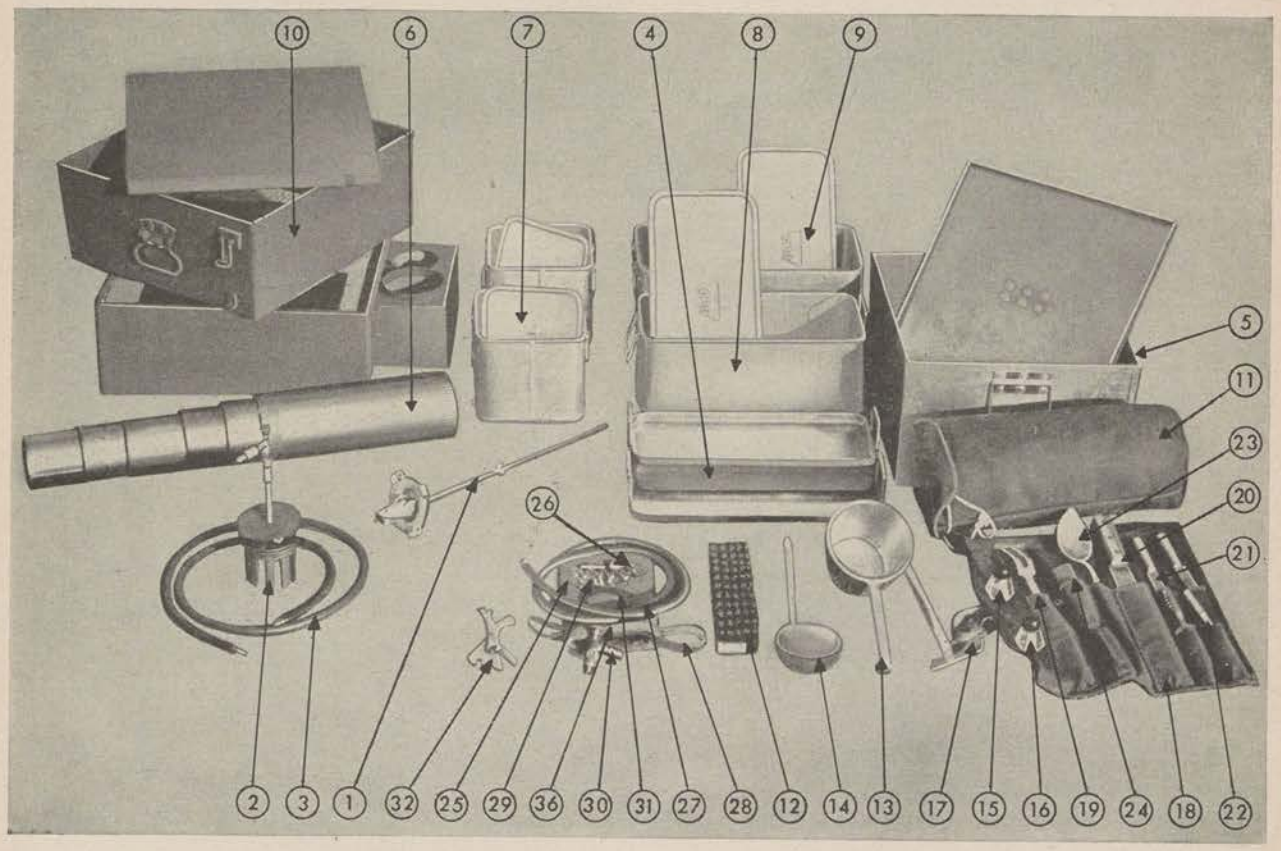

Figure 22. Components and utensils, outfit, cooking, small detachment (64–O–270).

stack side, according to the direction of the wind.

b. Insert burner in the hole, in the burner housing.

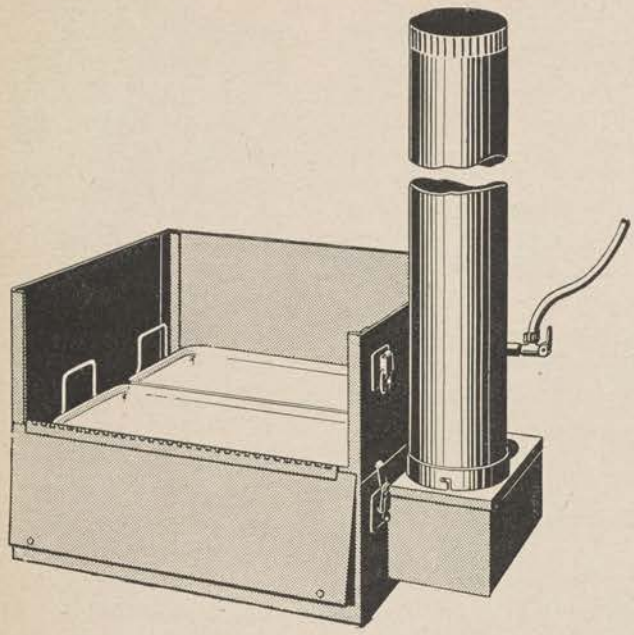

Figure 23. Frying pans, 64–P–667–55, used with outfit, cooking, small detachment.

c. Fill the fuel can with gasoline, kerosene, or fuel oil. Close the control valve, screw the fuel feed adapter into the fuel can, and clamp the hose to the adapter and to the control valve. Hold the center clamp on the adapter to prevent its turning and then lock the clamp down.

Note: The fittings provided at each end of the hose may be permanently attached to the control valve and the adapter, eliminating the necessity of threading and unthreading these fittings. Be certain that the hose is securely fastened.

d. Place the fuel can on its side at least 18 inches above the burner. Be certain that the can is firmly supported. In the event that the fuel can is not available or that the adapter breaks, fuel can be siphoned from any available container.

e. Erect the smokestack.

f. Place pots or frying pans on the stove, with handles up. Be certain that they are well seated and cover all openings. Air leaks under the pots will prevent the burner from functioning properly.

24. Operation and Maintenance

a. Operation. (1) Open the control valve slightly until fuel appears around the burner.

(2) Shut off the control valve and light the fuel. If kerosene or fuel oil is being used, it may be necessary to ignite an oil-soaked rag or piece of paper below the burner before turning on the fuel.

Caution: Do not have your face or hands over the burner when you are lighting it. To relight a hot burner, remove the burner from the hole, open the control valve slightly, light the burner, and replace it in the hole.

(3) Open the valve to a drip flow for about 4 minutes in order to give the burner time to heat. When gasoline is used, the burner should then be

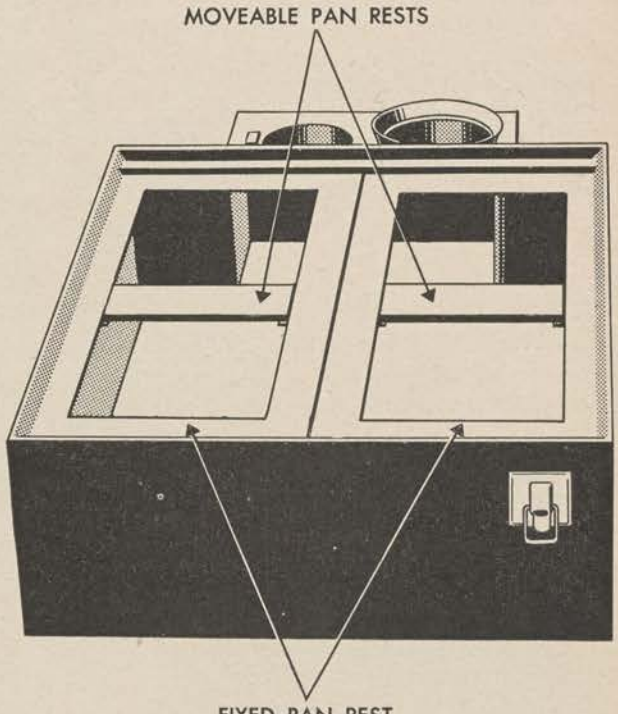

Figure 24. Outfit, cooking, small detachment, top view.

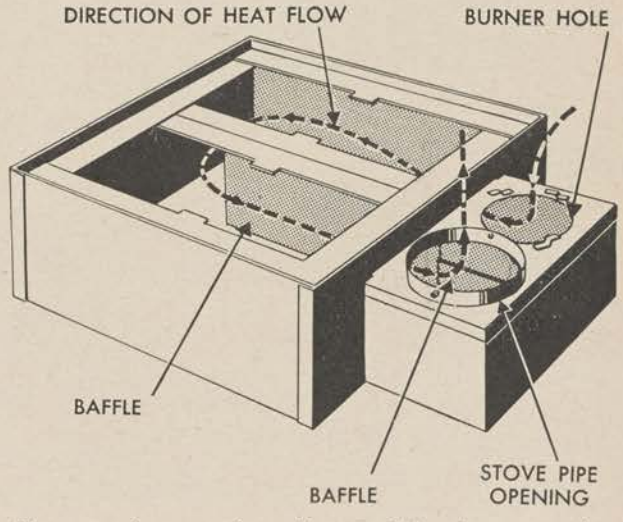

Figure 25. Stove, outfit, cooking, small detachment top view, showing heat flow.

able to take almost a solid stream of fuel without smoking. With gasoline or kerosene, smoke indicates a waste of fuel.

(4) Before shifting pots or pans, or removing them from the stove, raise the baffle between the burner and the stack (see fig. 25) and reduce the flow of fuel to a very slow drip, to avoid danger of flash heat.

(5) To conserve heat and speed up cooking, keep the pots covered as much as possible and let windshield cover rest on the raised pot handles.

(6) To increase the uniformity of heating, it is often desirable to have a piece of sheet metal under the pots near the burner.

(7) Remove the pan rests (see fig. 24) when the long boilers are used, or the uneven heat will warp these pots.

(8) Use the sterilizer as a tub for washing utensils.

b. MAINTENANCE. (1) See paragraph 19*b*.

(2) See section III, appendix, for a list of parts for mechanical maintenance.

25. How to Pack (see fig. 26)

a. The outfit is assembled for transportation in two packs, each of which is strapped to a packboard carried by one man. A third man carries the fuel container, also strapped to a packboard.

b. The first pack is made up in the following manner:

(1) Place the windshield on the ground, with the folding side locked into position.

(2) Place the sterilizing pan (not shown) inside the windshield.

(3) Place the two frying pans in the bottom of the sterilizing pan. On top of one frying pan put the two small boilers, with covers. On top of the other frying pan put the two long boilers, with covers, one inside the other.

(4) Inside the smaller one of the long boilers place the utensils and accessories, packed in the cutlery bag and the cutlery roll, and the scrubbing brush.

(5) Place the cover on the sterilizing pan and strap the pack to a packboard.

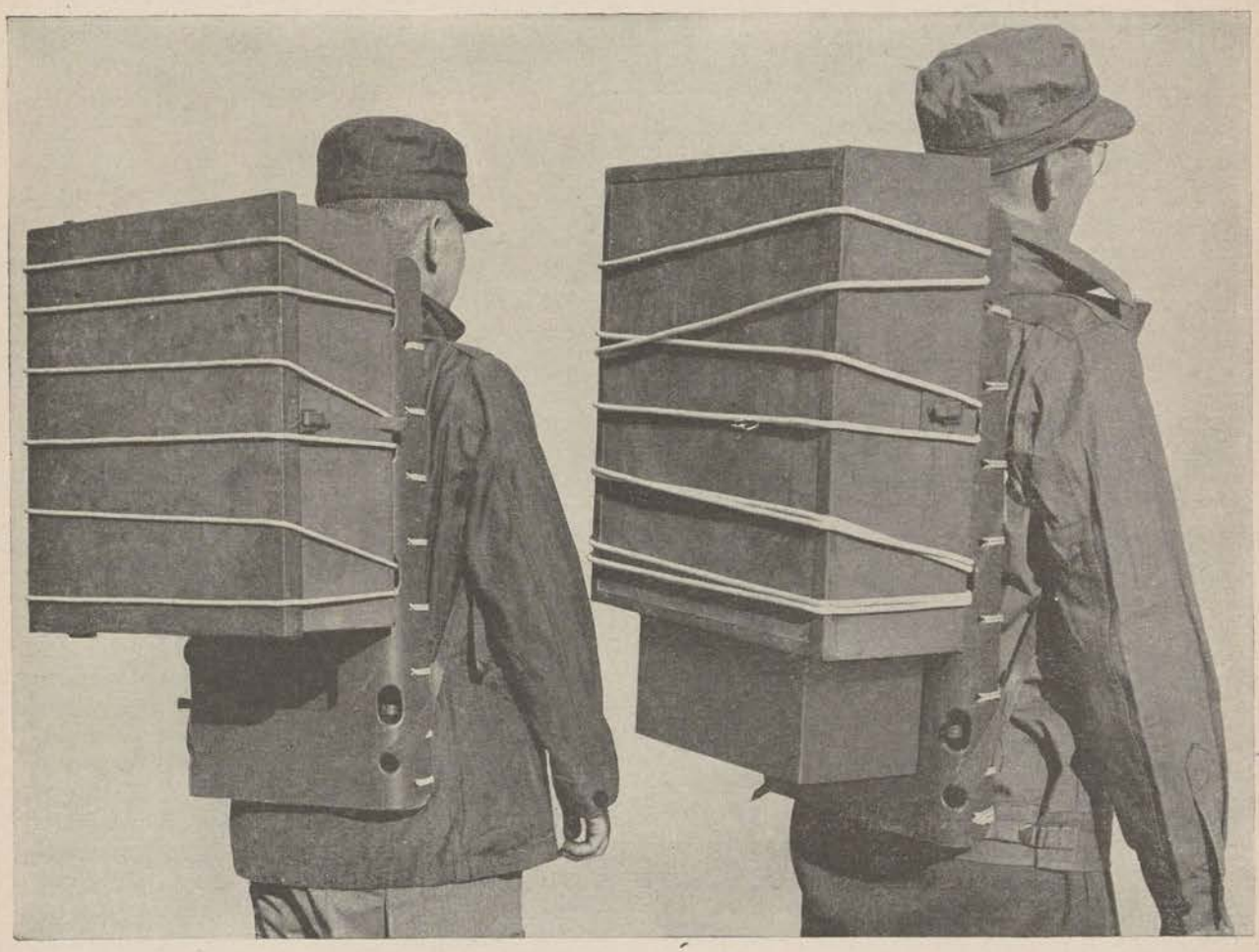

Figure 26. Outfit, cooking, small detachment, assembled for packboard transport.

c. The second pack is made up in the following manner:

(1) Remove the adapter from the gasoline can. Detach the hose. Remove the burner from the burner housing. Disassemble the stack.

(2) Inside the lower section of the stove place the burner housing, burner, stack (telescoped), hose, adapter, and the canvas roll for tools and maintenance parts.

(3) Lock the windshield cover down on the top of the lower section and strap this to the packboard.

Section III. OUTFITS, COOKING, WOOD-BURNING, AND STOVE EXPEDIENTS

26. Outfit, Cooking, Cavalry, Pack, Complete (Stock No. 64–O–205)

a. This outfit, equipped with wood-burning grates, is designed for the use of cavalry troops in the field.

b. Included with the outfit are two standard hangers, for use with the Phillips packsaddle. To pack the outfit, place the small items in the canvas utensil kit and the utensil bag, and place the candles in the candle bag. Place these bags inside the pans and nest the pans, boilers, and grates into two packs, one for each hanger. One pack animal carries both packs.

c. The outfit, cooking, pack, described in section 1, chapter 2, has been designed to replace this outfit.

d. The outfit, cooking, cavalry pack, complete (see fig. 27) is made up of the following components:

Item No.	Stock No.	Components	Quantity
1	64–B–100	Bag, outfit, cooking, C.P., candle	1
2	64–B–110	Bag, outfit, cooking, C.P., utensil, 6¾″ x 15⅞″	1
3	64–B–910	Boilers, outfit, cooking, C.P., with cover, No. 50	2
3	64–B–915	Boilers, outfit, cooking, C.P., with cover, No. 51	2
4	64–C–596–70	Candles, type II (Stearic-acid and Paraffin) class B (6 per lb.)	10 lbs.
5	64–C–725	Cleaver, butcher's, 8″ blade	1
6	64–D–200	Dippers, 1-qt., No. 56	2
7	64–F–275	Fork, cook, flesh, 2-tine, length 15″	1
8	64–G–332	Grates, outfit, cooking, C.P., large	2
	64–G–334	Grates, outfit, cooking, C.P., small	2
9	64–H–200	Hangers, outfit, cooking, C.P., with two 17″ straps	2
10	64–K–441	Kit, canvas, utensils	1
11	64–K–545	Knives, butcher, 10″ blade	2
12	64–K–660	Knives, paring	4
13	64–L–150	Ladle, length 15″	1
		Pans, bake and roasting, 4½″ x 15½″ x 17½″:	
14	64–P–386	No. 52, bottom	2
15	64–P–387	No. 52, top	2
16	64–S–115	Saw, butcher's, 14″ blade	1
17	64–S–1000	Spoons, basting, length (overall) 15″	2
18	64–S–1220	Steel, butcher's, size 10″	1
19	64–T–579	Turner, cake, length (overall) 15″	1

27. Outfit, Cooking, Mountain, Artillery, Complete (Stock No. 64–O–210)

a. Like the cavalry cooking pack, this outfit is furnished with wood-burning grates.

b. For transportation the outfit is assembled into two side loads, which should be packed (laired up) in pack covers (mantas) before being lashed. Place the small items in the pans and nest the pans, boilers, grates, and locking bars into two packs.

(1) Spread the manta on the ground and place the load diagonally across the center.

(2) Bring one corner of the manta snugly over the bundle, and place one or both knees on top. Fold in the opposite corner and bring the folded corner flap over the top of the bundle, so that the edge comes nearly across.

(3) Holding the manta in position with one knee, crimp the manta in at one end(as in crimping wrapping paper about the end of a shoe box) and bring the flap toward the center of the bundle. Crimp the other end and fold it over so that the folded edge will come near the middle and on top.

(4) With a lair rope (⅜-inch rope, 30 feet long, with an eye at one end) form a loop lengthwise around the middle of the bundle. Draw the rope taut so that the eye comes near the top of one end. Take a half hitch around the bundle near one end,

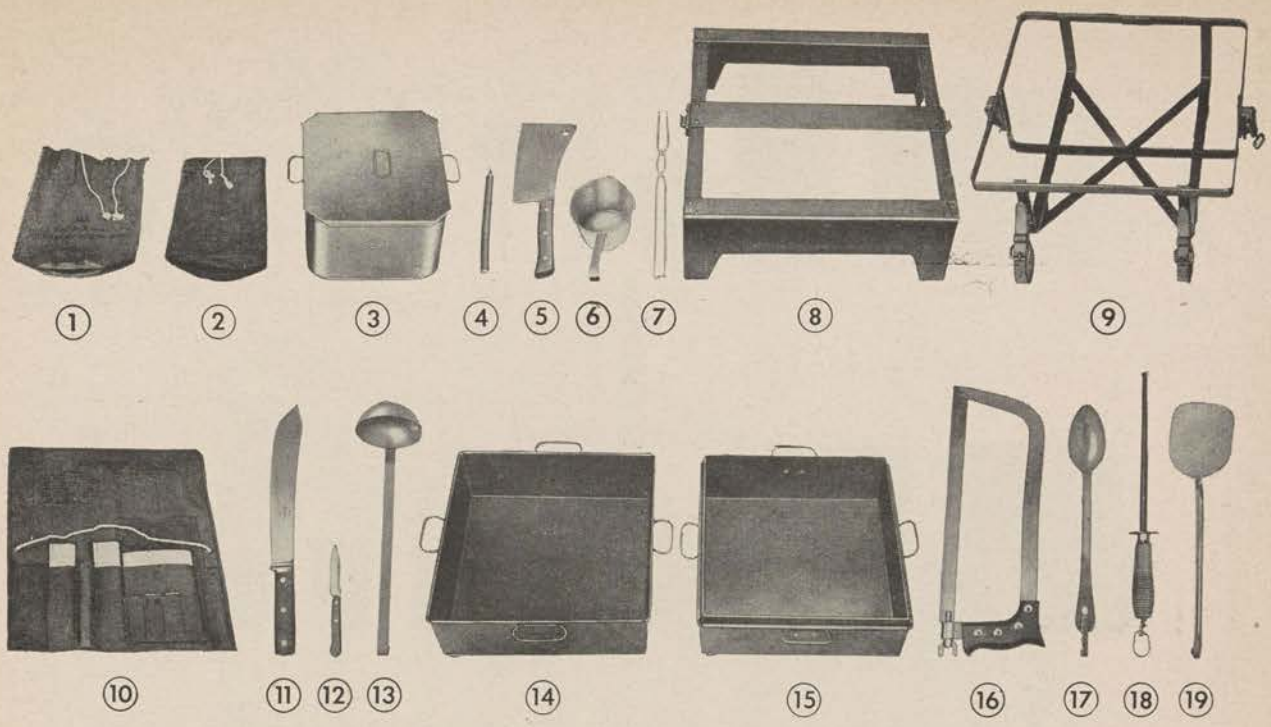

Figure 27. Outfit, cooking, cavalry pack, complete (64–O–205).

one in the middle, and one around the other end. Then carry the remainder of the rope around the bundle lengthwise and tie it on top with two half hitches.

c. The outfit, cooking, pack, described in section I of this chapter has been designed to replace this outfit.

d. The outfit, cooking, mountain artillery, complete (see fig. 28) is made up of the following components:

Item No.	Stock No.	Components	Quantity
1	64–B–220	Bars, outfit, cooking, M.A., locking	4
2		Boilers, outfit, cooking, M.A., with cover:	
	64–B–1040	M.A. 3	2
	64–B–1041	M.A. 4	2
	64–B–1042	M.A. 5	1
3	64–B–2085	Buckets, outfit, cooking, M.A., 6, 8½″ x 10¼″ x 14″	2
4	64–C–229	Can, grease, M.A. 7, outfit, cooking, M.A.	1
5	64–C–725	Cleaver, butcher's 8″ blade	1
6	64–D–210	Dippers, 2-qt.	4
7	64–F–285	Fork, Cook, flesh, 2-prong, length (overall) 21″	1
8	64–G–336	Grates, outfit, cooking, M.A., 12″ x 20¼″ x 27″, complete with locking bars	2
9	64–K–240	Kettles, outfit, cooking, M.A., preserving, with cover, 16-qt.	1
10	64–K–545	Knives, butcher, 10″ blade	2
11	64–K–660	Knives, paring	4
12	64–P–425	Pans, bake and roasting, 5½″ x 18¼″ x 24⅝″, M.A., 1, bottom	2
13	64–P–430	Pans, bake and roasting, 6″ x 18¼″ x 24⅝″, M.A. 2, top	2
14	64–P–660	Pan, frying, outfit, cooking, M.A. (lipped 13½″ x 2⅛″) with detachable extension handle	1
15	64–S–115	Saw, butcher's 14″ blade	1
		Sheaths, outfit, cooking, M.A.:	
16	64–S–535	Butcher knife	2
17	64–S–538	Cleaver	1
18	64–S–542	Paring knife	1
19	64–S–790	Skimmer, length (overall) 15″	1
20	64–S–1010	Spoons, basting, length 15″	2
21	64–S–1220	Steel, butcher, size 10″	1

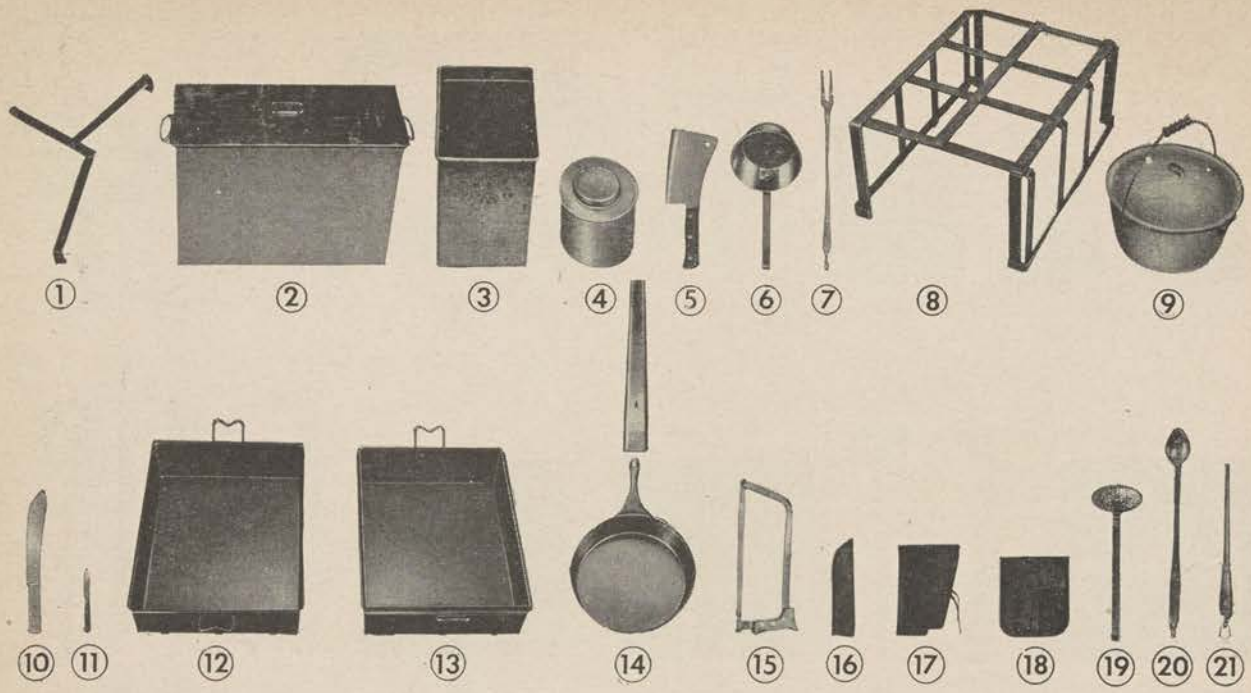

Figure 28. Outfit, cooking, mountain artillery, complete (64–O–210).

28. Outfit, Cooking, Philippine Scouts, Complete (Stock No. 64–O–215)

a. This item is the standard cooking outfit for Philippine Scouts.

b. No grates are provided with the outfit, but two hooks are furnished for each boiler to enable the boiler to hang over a fire.

c. To pack the outfit for transportation, place the smaller items inside the pans and boilers and nest the pans and boilers.

d. The outfit, cooking, Philippine Scouts, complete (see fig. 29) is made up of the following components:

Item No.	Stock No.	Components	Quantity
1		Boilers, outfit, cooking, Philippine Scouts, with cover:	
A	64–B–1050	No. 81	1
B	64–B–1051	No. 82	1
C	64–B–1052	No. 83	1
D	64–B–1053	No. 84	1
E	64–B–1054	No. 85	1
2	64–D–210	Dippers, capacity 2-qts.	1
3	64–F–285	Forks, cook, flesh, length (overall) 21″	1
4	64–H–355	Hooks, outfit, cooking, P.S. boiler	10
5	64–K–545	Knives, butchers', 10″ blade	2
6	64–P–320	Pans, bake and roasting, 3″ x 11¼″ x 18¼″	2
7	64–S–790	Skimmers, length (overall) 15″	1
8	64–S–1010	Spoons, basting, length (overall) 21″	2
9	64–S–1220	Steels, butcher's 10″ blade	1

29. Stove Expedients

a. On occasion it may be necessary to cook or to heat foods, using only the simplest of materials.

b. A small amount of gasoline in an open tin can will burn safely and may be used for heating in an emergency. Putting sand in the can and pouring the gasoline on this, will produce a slower fire.

c. Various types of "canned heat" or candle wax for heating may be available. Small pieces of wax 2 inches by 1 1/3 inches by 1/2 inch made of 60 per cent paraffin, 30 percent stearic acid, and 10 percent wood flour have been used satisfactorily.

d. To get the best results from an improvised stove, scoop a narrow trench in the ground, about 8 inches long and sloping to a depth of 6 inches or less at one end. (See fig. 30). Place the heating material at the deep end (which should be toward the wind) and place a canteen cup or cooking vessel over this end of the trench. Regulate the draft by adjusting the position of the cup.

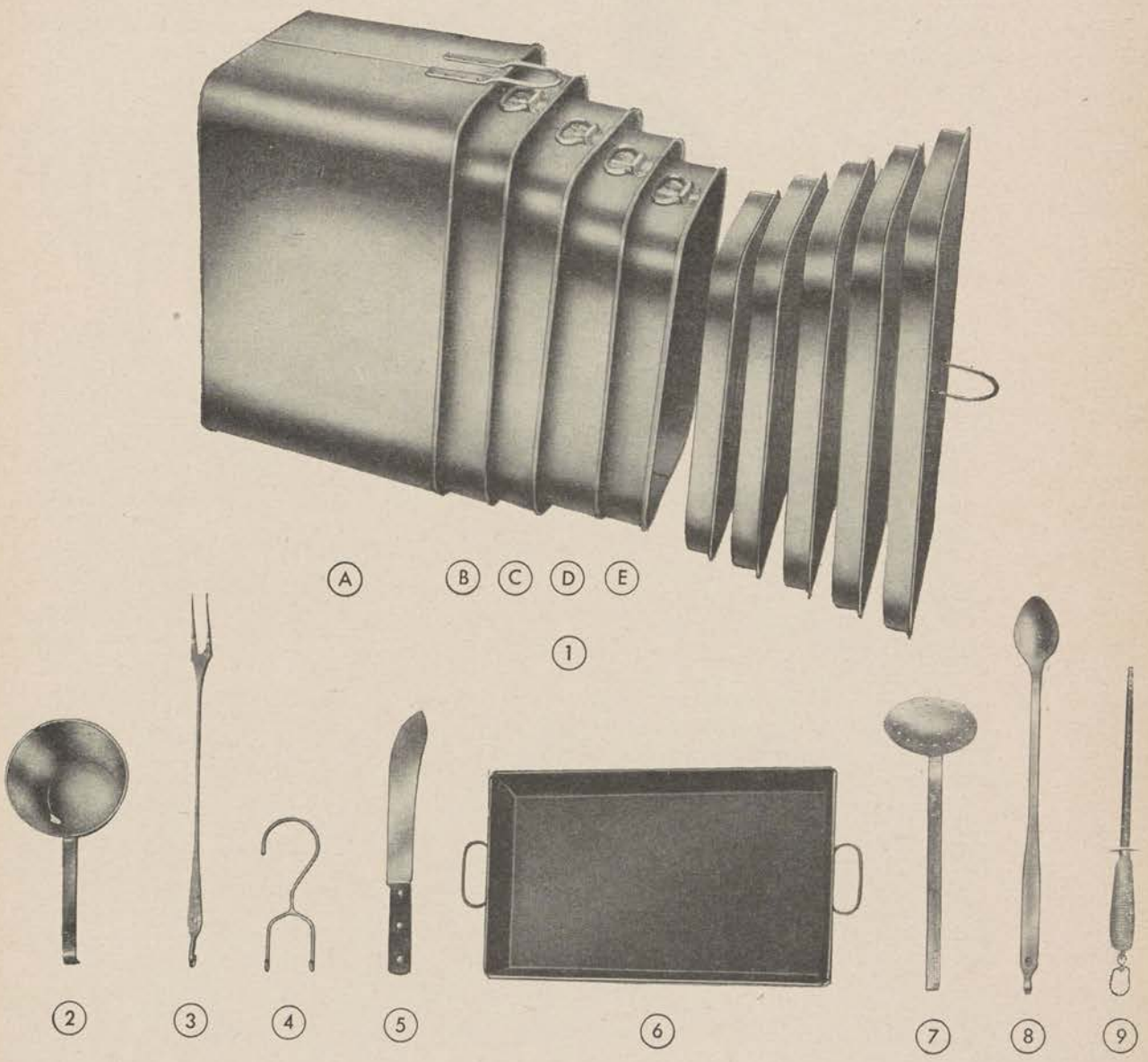

Figure 29. Outfit, cooking, Philippine Scouts, complete (64–O–215).

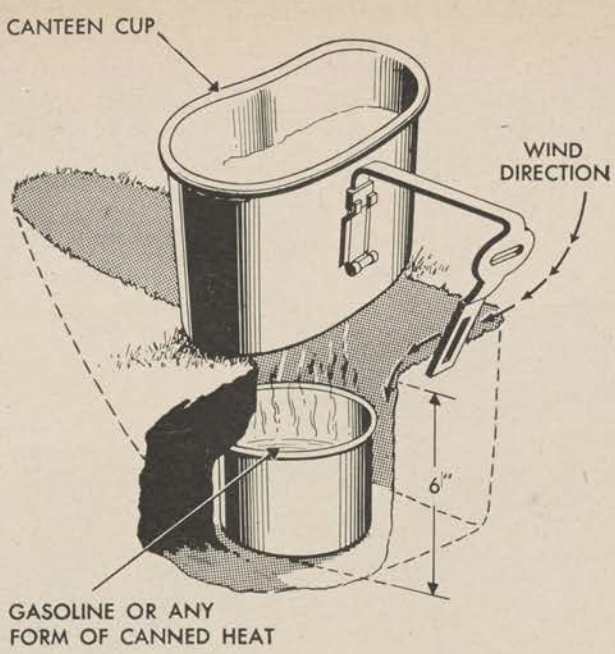

Figure 30. A type of simple heating expedient.

CHAPTER 3

RANGES

Section I. RANGE, FIELD, M1937

30. Description

a. The M1937 field range (stock No. 65–J–2225) is the most adaptable and satisfactory appliance an Army cook has ever had for preparing meals in the field. It can be used for boiling, roasting, frying, and griddle cooking, and can easily be adapted to function as a bake oven. It is normally heated by the M1938 gasoline fire unit, but in an emergency it can be operated with a wood fire. It is constructed in small cabinet units, each one complete in itself, and can be quickly installed in trucks or troop trains. The range, field, M1937, is included in Tables of Equipment on the following basis:

(1) For organizations of 50 individuals or less, a 1-unit range (stock No. 65–J–2225).

(2) For organizations of 51 to 100 individuals, a 2-unit range (stock No. 65–J–2226).

(3) For organizations of 101 to 225 individuals,

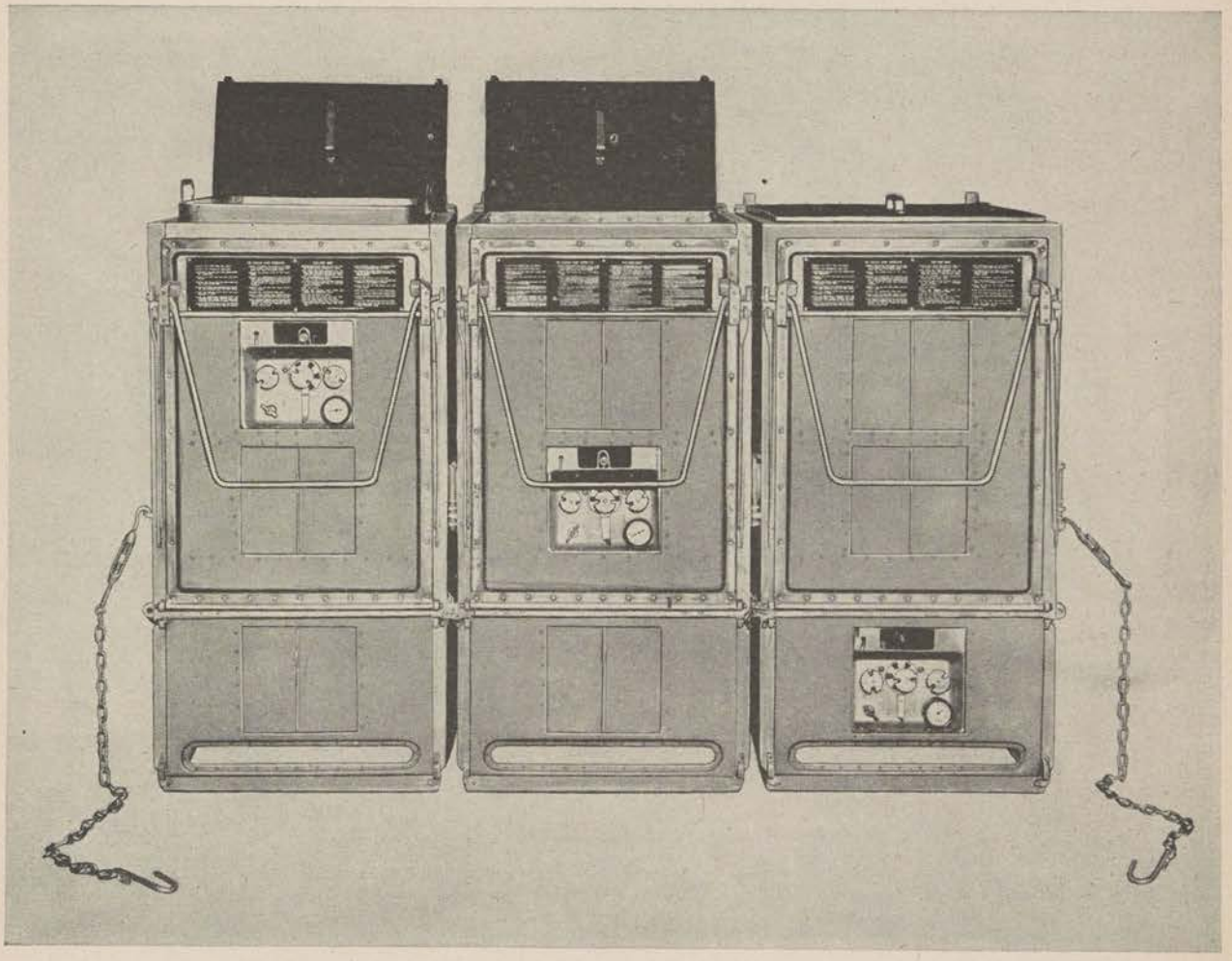

Figure 31. Range field, M1937 (65–J–2227) (3-cabinet unit with fire units in three possible positions).

a 3-unit range (stock No. 65–J–2227). (See fig. 31.)

(4) For organizations of 226 individuals or more, a 4-unit range (stock No. 65–J–2228).

(For a table of initial issues, see sec. VI, app. For a list of replacement parts, see sec. V, app. This is not a maintenance list, however; mechanical maintenance parts are included in sec. VI, app.)

b. The M1937 fire unit is a separate piece of equipment and may be used in any one of three positions in the cabinet, depending on the type of cooking to be done. (See fig. 31.) The slide doors in front of the fire unit must always be open when the unit is in use. It also may be operated outside of the cabinet. Gasoline is carried in a 5-gallon can. In addition, a folding grate (see fig. 32) is carried at the bottom of the range to be used when a wood fire is necessary.

c. Cooking vessels for the range (fig. 32) include a 10-gallon roasting pan; a pan cover which may be turned over and used as a griddle; a cake pan which may be placed inside the roasting pan; a 15-gallon cooking pot (with cover); and a 10-gallon insert (with cover), which may be used independently or inserted in the larger part to form a double boiler. In addition the unit is provided with a complete set of cooking utensils (see fig. 33). A cook-pot cradle is also included. Handles for lifting are provided on the range cabinet, the fire unit, and on all cooking vessels. Two hay hooks are included for pulling out the cook-pot cradle and lifting hot vessels from the range (see fig. 34 for accessories). In addition, a splash plate is provided to be fitted to the cover when the range is in use in a truck or a train.

d. Water heaters issued with the range are described in paragraphs 38 and 39.

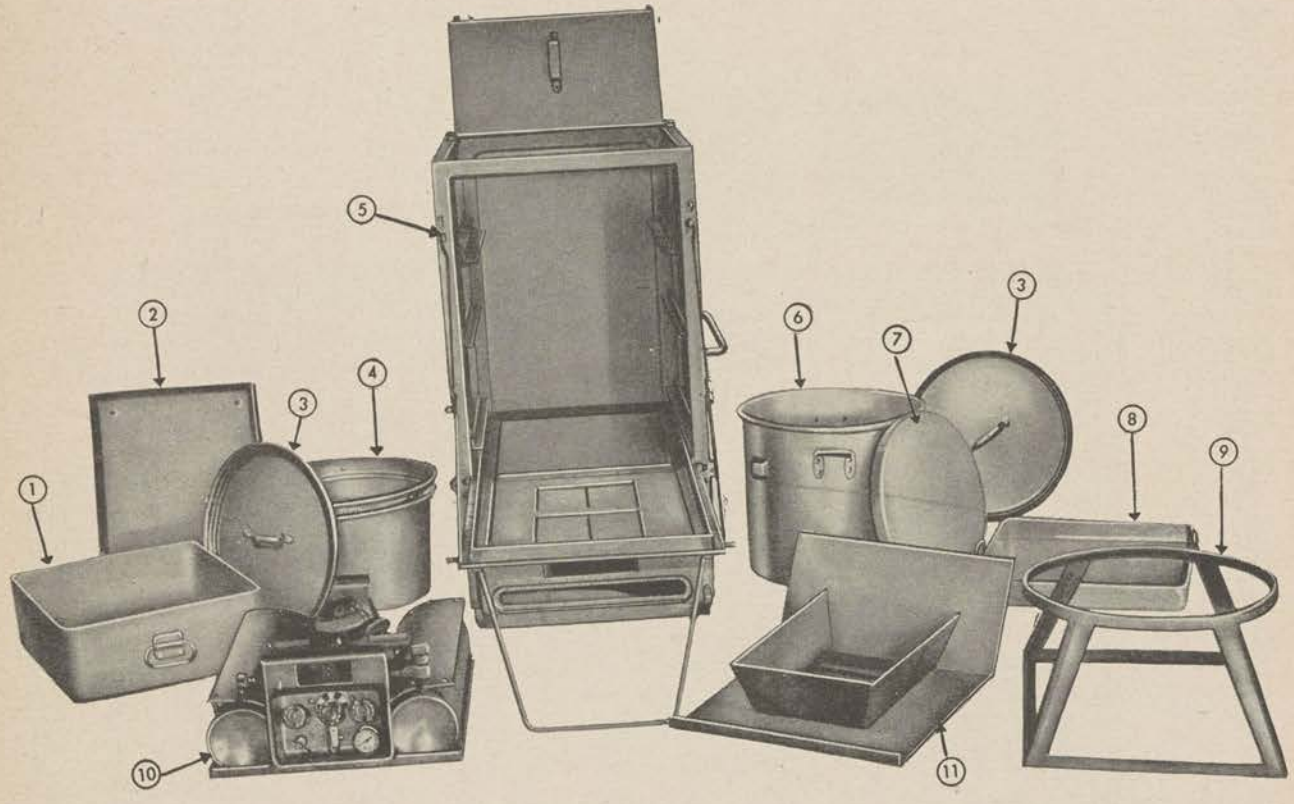

1.	64-P-275	*Pan, bake and roasting.*
2.	64-P-511	*Pan, cake.*
3.	64-C-1221-50	*Cover, cook-pot, or insert.*
4.	64-I-680	*Insert, cook-pot, 10-gallon.*
5.	65-J-1330	*Cabinet.*
6.	64-P-2100	*Pot, cook, heavy, 15-gallon.*
7.	65-J-2137	*Plate, splash.*
8.	64-C-1223	*Cover, roasting pan.*
9.	65-J-1645	*Cradle, cook-pot.*
10.	65-J-2605	*Unit, fire.*
11.	65-J-1865	*Grate, wood-burning.*

Figure 32. Cabinet, fire unit, and equipment of range, field, M1937.

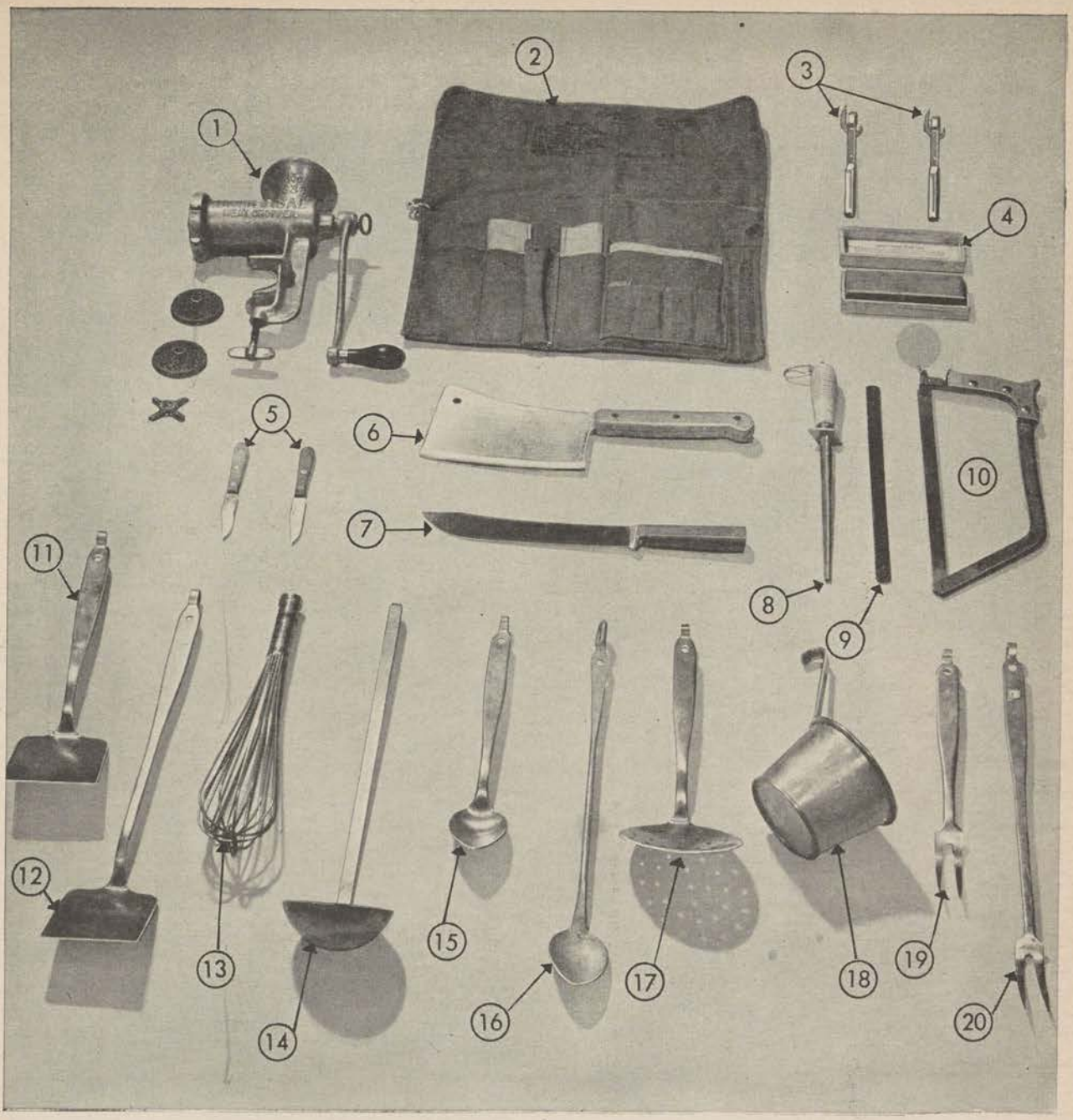

1.	64-M-115	*Machine, chopping (grinding), meat and foods, hand operated, small.*
2.	64-K-441	*Kit, canvas, utensils.*
3.	64-O-130	*Openers, can, hand.*
4.	41-S-5274	*Stone, sharpening, mounted, medium grit, size 1 x 2 x 6".*
5.	64-K-660	*Knives, paring.*
6.	64-C-725	*Cleaver, butchers', blade 8".*
7.	64-K-545	*Knives, butchers', length of blade 10".*
8.	64-S-1220	*Steel, butchers', length of blade 10".*
9.	64-B-436	*Blade, saw, butchers', length (overall) 14 1/16", center to center of holes 14".*
10.	64-S-115	*Saw, butchers', 14" blade.*
11.	64-T-579	*Turner, cake, length overall 15".*
12.	64-T-584	*Turner, cake, length overall 21".*
13.	64-W-105	*Whip, egg, 16".*
14.	64-L-160	*Ladles, length overall 21".*
15.	64-S-1000	*Spoon, basting, length overall 15".*
16.	64-S-1010	*Spoon, basting, length overall 21".*
17.	64-S-790	*Skimmer, length overall 15".*
18.	64-D-200	*Dipper, 1 quart.*
19.	64-F-275	*Fork, cook, flesh, length overall 15".*
20.	64-F-285	*Fork, cook, flesh, length overall 20".*

Figure 33. Utensils supplied with 1-cabinet unit of range, field, M1937 (including items issued in canvas utensil kit).

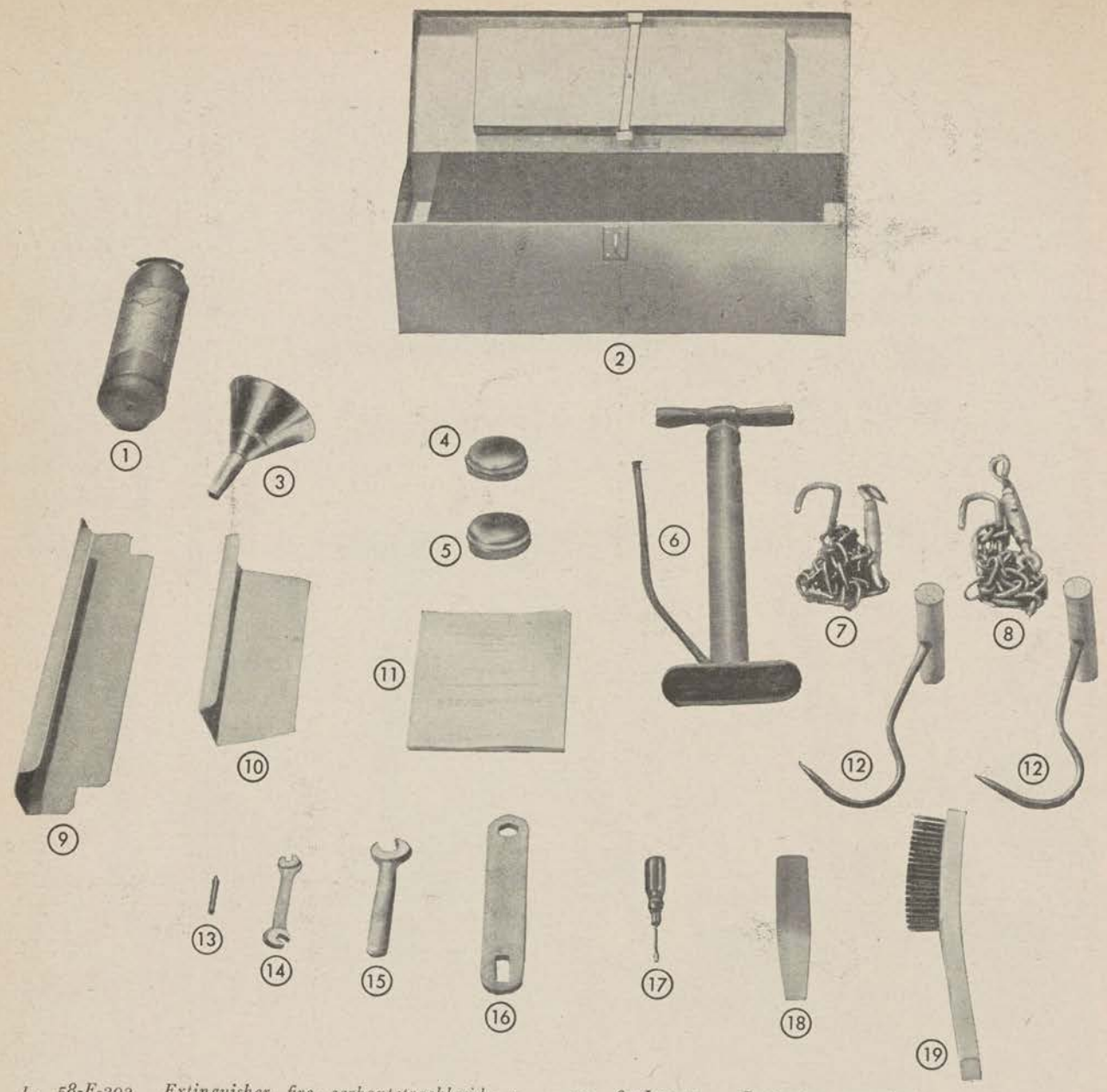

1.	58-E-202	*Extinguisher, fire, carbontetrachloride, 1 qt. pump type.*
2.	65-J-1146	*Box, tool, empty.*
3.	64-F-540	*Funnel, with strainer, ½ qt.*
4.	65-J-1585	*Container, tin, small parts (not issued for replacement).*
5.	65-J-1590	*Container, tin, with graphite grease.*
6.	65-J-2160	*Pump, air pressure.*
7.	65-J-1470	*Chain, tie-in, left.*
8.	65-J-1475	*Chain, tie-in, right.*
9.	65-J-2142	*Protector, arm, long.*
10.	65-J-2143	*Protector, arm, short.*
11.	65-J-1115	*Book, instruction.*
12.	70-H-1190	*Hooks, hay (hook ⅜", handle 5¼").*
13.	65-J-2230	*Reamer, fuel jet.*
14.	65-J-2696	*Wrench, set screw, 5/16".*
15.	65-J-2690-45	*Wrench, open end, ⅝".*
16.	65–J–2693	*Wrench, screw, cap, filter case.*
17.	41-S-1101	*Screwdriver, common, normal duty, single grip, length of blade 3".*
18.	65-J-1565	*Cleaner, slot, burner.*
19.	65-J-1300	*Brush, steel wire.*

Figure 34. Accessories supplied with 1-cabinet unit of range, field, M1937.

31. Cooking Operations

a. Boiling. Boiling in the cook pot is done with the fire unit in the bottom position. It is possible to boil 12 gallons of water in 30 minutes. Either of the cook pots may be placed in the cradle or the two may be fitted together to form a double

boiler. Use the heavy cover when cooking with either vessel. When the door of the cabinet is opened, the door handle must be firmly planted on the ground to support the door (see fig. 35). If the handle slips, the range may be overbalanced when the cradle is pulled out (see fig. 36), or the contents of the cooking pot may spill if the cradle does not come out easily.

b. ROASTING. (1) Roasting is done in the roasting pan with the fire unit in either the bottom or the middle position. If something is to be boiled at the same time that meat is being roasted, put the fire unit in the bottom position. If roasting is the only operation being carried on, keep the fire unit in the middle position.

(2) Always put the cover on the roasting pan when the pan is in use, and keep the lid of the range closed.

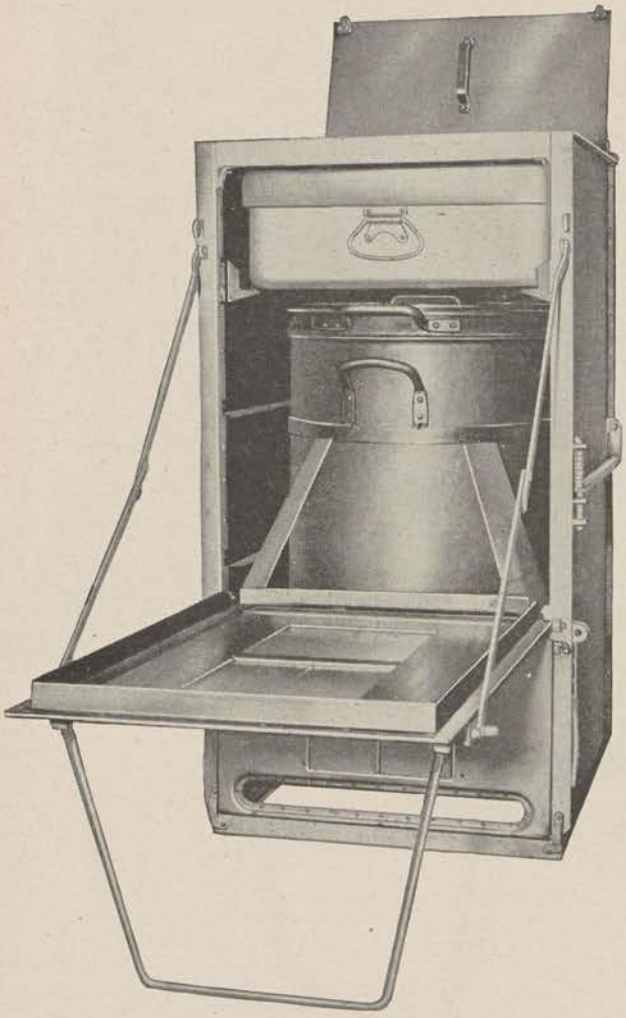

Figure 35. Range, field, M1937, with cooking equipment in place.

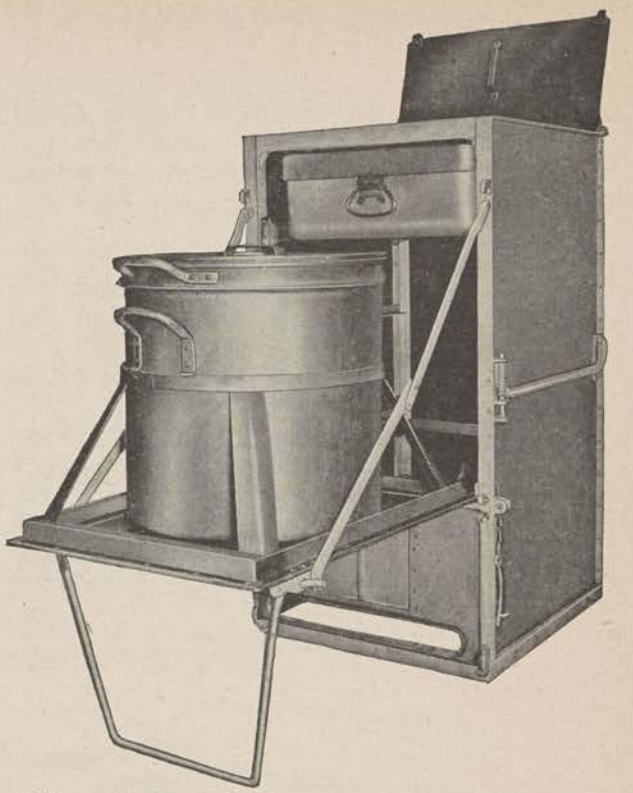

Figure 36. Range, field, M1937, with cradle and cook pot withdrawn.

c. FRYING. Frying is done in a roasting pan with the cover removed. The fire unit should be in the middle position. For safety, use the two arm protectors, which fit along the sides of the roasting pan or griddle, one placed along the front and the other along the side of the range where the cook is working.

d. GRIDDLE COOKING. For griddle cooking, turn the top of the roasting pan upside down and fit it to the brackets in the top corners in the range. Put the fire unit in the top position. Be sure to insert the arm protectors.

e. BAKING. Baking may be done in the covered roasting pan or in the cake pan, placed inside the covered roasting pan. Pies will bake well in the roasting pan alone, but for all other baked foods the cake pan should be used. Paragraph 32 describes the method of adapting the range for use as an oven.

f. COOKING FOR SMALL MESSES. If small cooking vessels are available, the range can easily be adapted to cooking for small messes. Cut a piece of sheet steel 19 by 23⅛ inches so that it will slide into the range on the burner rails in the top position. Place the burner in the middle position and put the cooking vessels on the steel plate

32. Adapting M1937 Range for Use as an Oven

In emergencies, the Army field range M1937 may be adapted, with improvised materials, for baking on an extensive scale. In areas where other bakery facilities are not provided, the range will be found to be very satisfactory as a bake oven substitute.

a. METHOD NO. 1. (BREAD AND PASTRY). (1) The most satisfactory method of adapting the range for baking bread is to construct three solid shelves and fit them to the rails in the range. (See fig. 37). This method triples the ordinary baking capacity of the range.

(*a*) Construct the bottom shelf in the form of a "sandwich," consisting of a piece of $\frac{1}{4}$-inch black iron plate, a $\frac{1}{4}$-inch layer of asbestos (or sand), and a top sheet of 22-gauge iron plate. The shelf is 19 by $23\frac{1}{8}$ inches, with two oblong circulation slots, $9\frac{1}{4}$ by 2 inches, cut on each side, $\frac{3}{4}$ inch from the side and $1\frac{1}{4}$ inches from the ends. Cut the front corners $1\frac{1}{2}$ inches from front and side, as illustrated in figure 37.

(*b*) Construct the center shelf also in the form of a "sandwich," with 2 pieces of 22-gauge black iron, 19 by $23\frac{1}{8}$ inches, separated by a 3/16-inch layer of asbestos or sand. Cut the shelf with the same slots as the bottom shelf and cut the front corners similarly.

(*c*) Construct the top shelf of one piece of 16-gauge black iron, $17\frac{1}{8}$ by $23\frac{1}{8}$ inches, with 2 oblong slots at each side, $9\frac{1}{4}$ inches by 1 inch.

(2) In order for the oven to reach the proper baking temperature of 425° to 450° F. without excess flash heat, light the firing unit 30 minutes before baking is started. Temperature can be determined by the hand count method (par. 65*e*). Be sure that the burner maintains a green flame throughout the baking process.

(3) The oven will bake 24 pounds of regular

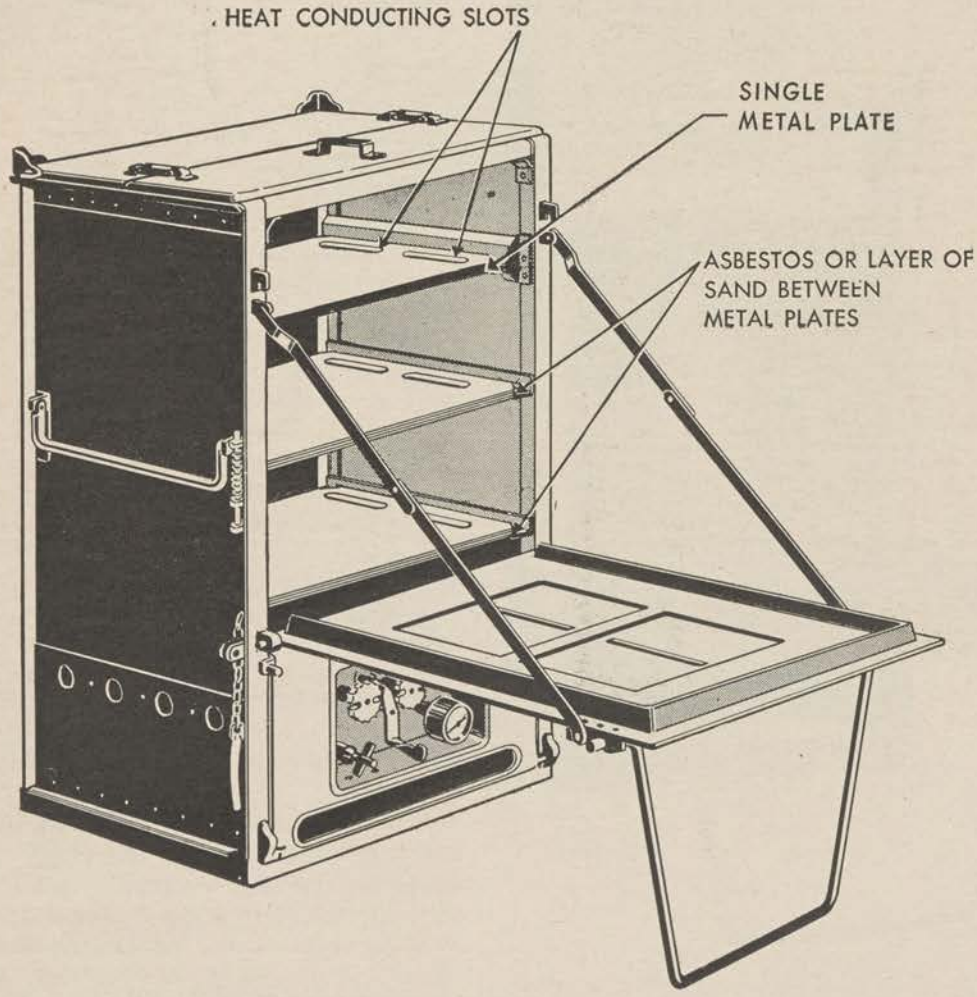

Figure 37. Range, field, M1937, adapted for baking bread.

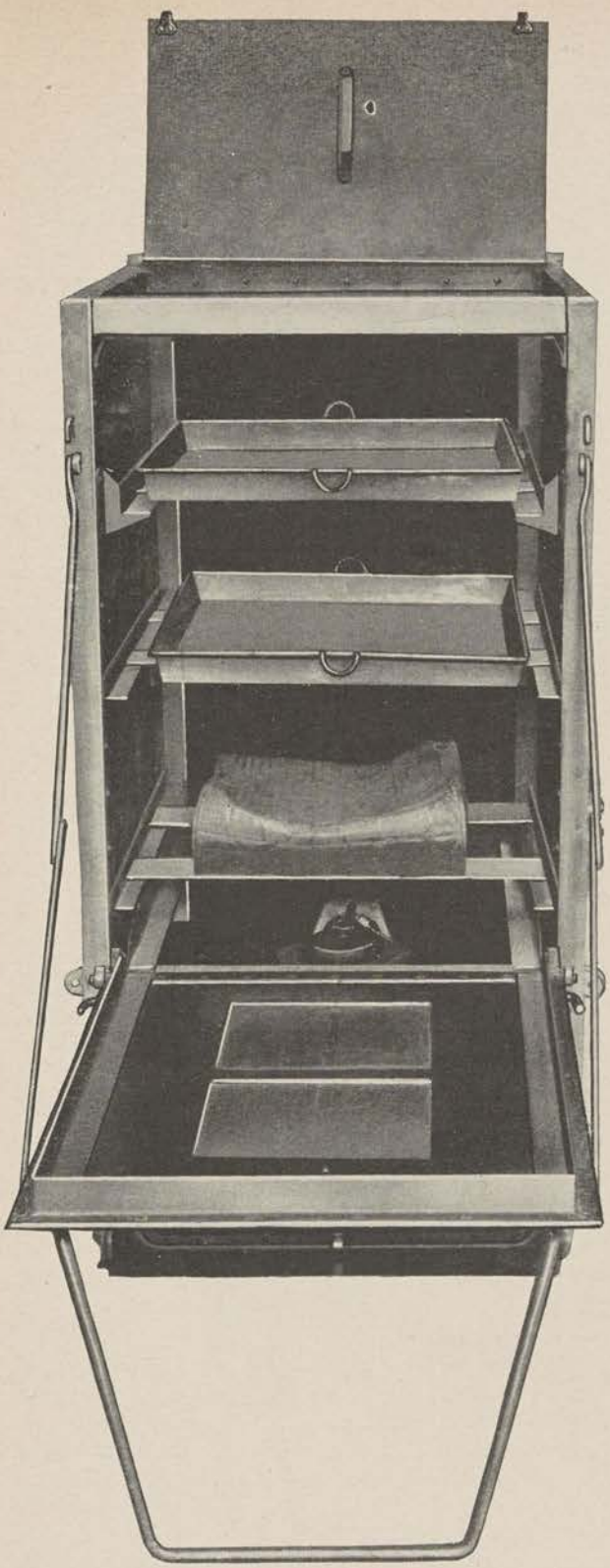

Figure 38. Simple expedient for adapting range, field, M1937, for pastry baking.

field bread or 30 pounds of field sheet bread at one time. During baking, shift the pans from bottom shelf to top, from top to middle, and from middle to bottom at least four times. Approximately 60 minutes are required to bake the sheet bread and from 100 to 110 minutes to bake the field bread.

(4) Besides bread, such products as biscuits, rolls, cobblers, and pies can be baked successfully with the range when it is adapted in this manner.

b. METHOD NO. 2 (PASTRY) (see figs. 38 and 39). A simpler method of increasing the baking capacity of the range is to construct only pan rests instead of solid shelves. When adapted in this manner the range will bake pastry very well but will not bake bread satisfactorily.

(1) For the bottom shelf, cut two angle irons, 19 inches long (D, fig. 39). Place these on the middle burner rails in the cabinet and lay on them any large flattened can (A, fig. 39). This can serves to distribute the heat evenly and will be found more satisfactory than a single piece of metal.

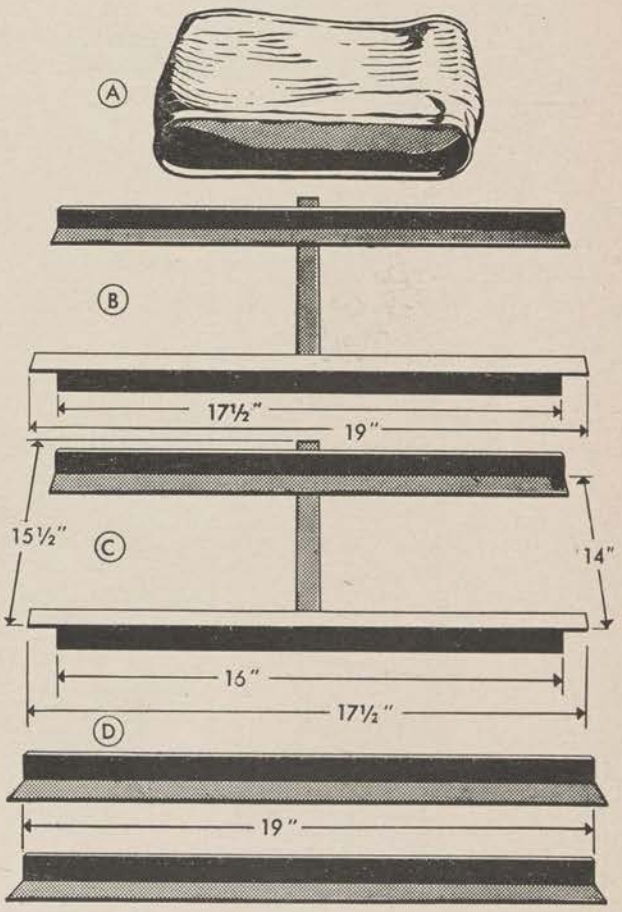

Figure 39. Parts necessary for adapting range, field, M1937, for pastry baking.

(2) For the center shelf, construct an angle iron pan rest in the shape of an H (B, fig. 39), Make the rest 19 inches wide and not more than 23 inches deep. In order to fit the rest to the top

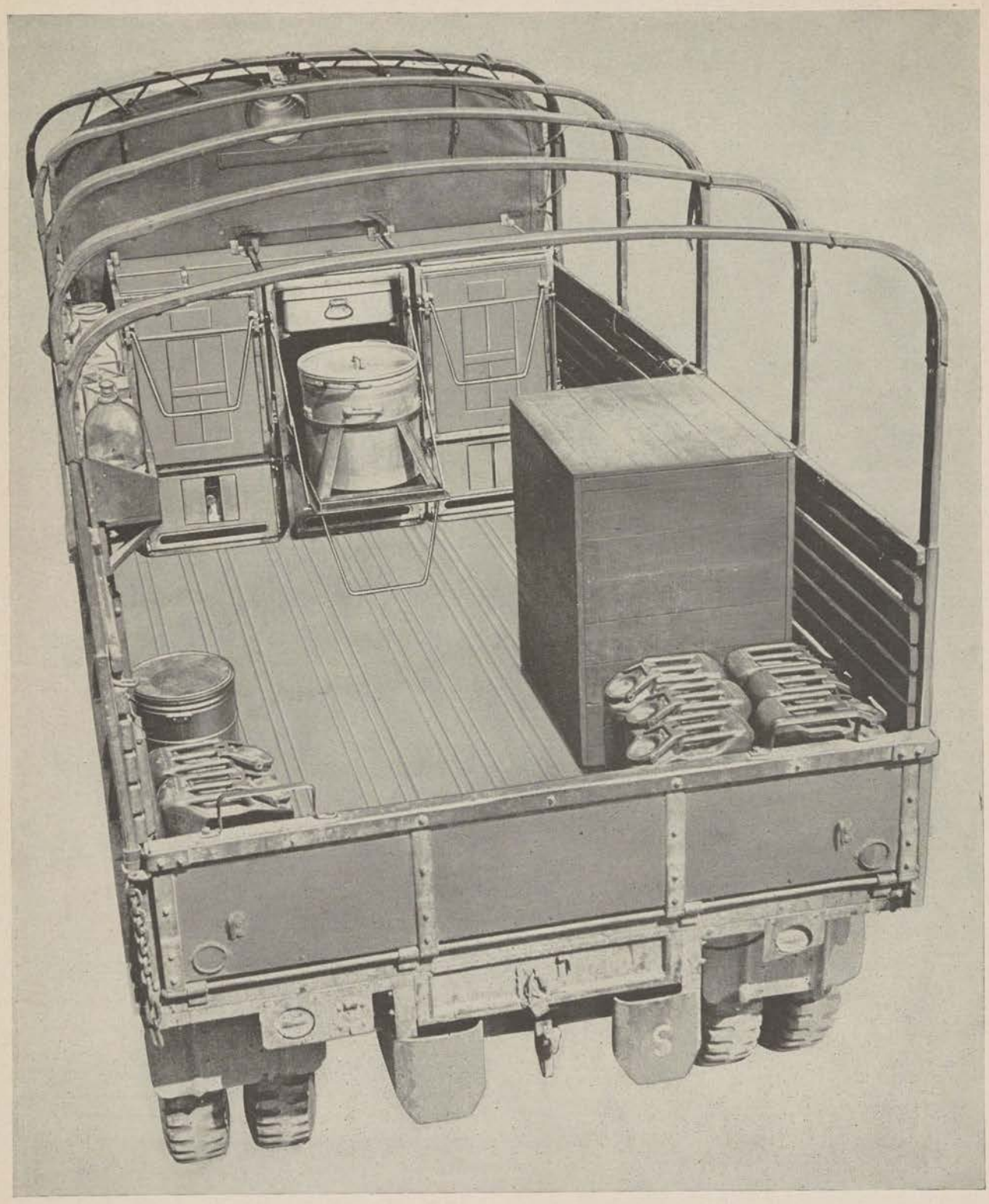

Figure 40. Three-cabinet unit, range, field, M1937, installed in kitchen truck.

burner rails, cut a notch from each end of the front iron, $\frac{3}{4}$ inch from each end, as illustrated.

(3) For the top shelf, construct an H rest similar to that described in *(b)* above. (See C, fig. 39.) Make the rest $17\frac{1}{2}$ inches wide and cut a notch $\frac{3}{4}$ of an inch from each end of the front iron. Fit the rest onto the rails in the cabinet which are normally used for the roasting pan.

33. Installation and Use in Motor Convoys

One-, two-, or three-cabinet units of the M1937 range may be installed at the front end of the $1\frac{1}{2}$-ton truck. (See fig. 40.)

a. Secure the cabinet to the truck by the tie-in chains, which are carried in the repair kit when they are not in use. Anchor the chain securely to the sides of the truck, and tighten by means of the turnbuckles.

b. Never load the gasoline on the same truck that carries the ranges or food.

34. Installation and Use in Railway Kitchen Cars

a. When properly installed, the M1937 range may be used for cooking in railway kitchen cars. (See figs. 41 and 42.)

b. Installation of the range must be made under supervision of a commissioned officer.

c. Place all range cabinets against the side wall of the car, latch them securely together, and anchor by chains and wooden blocks. Secure the blocks to the floor of the car with sixteenpenny nails or with lag screws, whichever will cause less damage to the floor. Run the large hook on the outer end of the chain through a link of the chain to serve as a pull bar against the outer ends of the wooden blocks.

d. If the car has a wooden floor and wooden sides, leave a space of 2 inches between the side of the car and the range, and place a shield of sheet metal, 20-gauge or heavier, under the cabinets. The shield must cover the entire floor space occupied by the range and must extend 4 inches beyond the front edge.

e. GASOLINE SUPPLIES. (1) All gasoline, either in kitchen cars or in the reserve supply, must be carried only in cans meeting Interstate Commerce Commission specification "ICC 5–L." Range reservoirs must be filled only from cans of this type. A nozzle may be furnished with each unit of cabinets for the safe transfer of gasoline into the tank of the range.

(2) Three such cans of gasoline may be furnished for each gasoline range in the car in which ranges are installed (kitchen car), with a maximum of nine cans permitted in any one car. Additional gasoline for cooking purposes may be carried in a boxcar adjacent to the kitchen car, or other boxcar, in a mixed troop train. This reserve supply is limited to eight 5-gallon cans. Gasoline cans must be kept in individual wooden containers, installed as far away from the ranges as practicable, and securely fastened to the car floor as illustrated in figure 42. Whenever the reserve supply must be used, an empty can from the kitchen car must be exchanged for each full can removed from the reserve. All empty cans in either car must be capped and placed in a braced location. Gasoline must never be transferred from one container to another while the containers are on or near a train. Smoking in the vicinity of kitchen cars, reserve supply cars, or gasoline containers is prohibited.

(3) Two placards must be attached to the boxcar in which the reserve gasoline is carried. The first placard must have the word "DANGEROUS" in large letters. Below this must be a second placard, 8 by 10 inches, reading, "EXTRA GASOLINE FOR COOKING PURPOSES," beneath which on the same card must appear the word "INFLAMMABLE" in red letters. Care must be taken to prevent other material in the car from falling on the cans or sliding against them.

f. Refueling of fire units must be supervised by a commissioned officer. To avoid danger from spilled gasoline, before refueling a fire unit remove it to the end of the car away from the ranges, or take it outside the car if practicable. Never refuel a fire unit while there is any fire in the car or while the car is in motion.

g. The installation and use of the water heater unit in railway kitchen cars is prohibited. The spare fire unit normally used for heating water may be carried, provided it is securely fastened to the floor of the car.

h. A 1-quart carbon tetrachloride fire extinguisher and a bucket of sand must be provided in the car for each range of one to three cabinets.

i. The War Department has set up the following special procedure for kitchen cars passing through the tunnels which lead to the city of New York:

(1) All gasoline in fire units and in containers must be removed from the car before the train enters the tunnels (entering or leaving the city) and replaced after the train has passed through.

(2) The railroad companies have made arrangements for removal and replacement of the gasoline.

(3) Removal and replacement of the gasoline must be supervised by a commissioned officer.

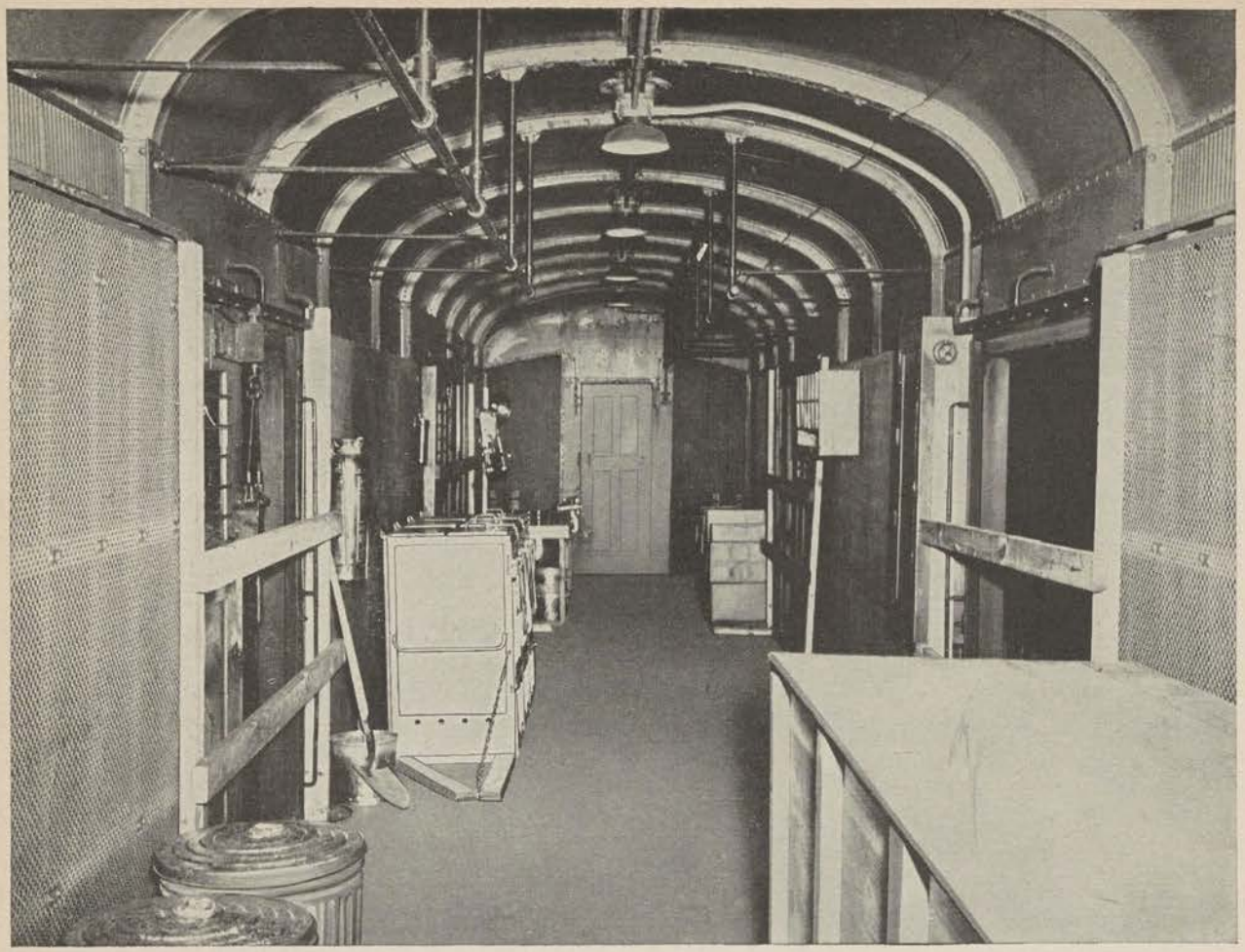

Figure 41. Three-cabinet unit, range, field, M1937, installed in railway kitchen car.

35. Care and Maintenance of Cabinet and Cooking Vessels

a. Responsibility for preventive maintenance, including cleaning, minor repairs, and replacement of worn or damaged parts, is that of the using organization. When major units cannot be repaired by replacement of parts, complete units will be submitted for exchange.

b. Handle the range cabinet carefully to avoid scratching and denting the walls. Remove all spilled food and grease promptly.

c. The cabinet may be cleaned with soap or scouring powder but must not be cleaned or polished with abrasive materials.

d. When the M1937 range is first received, the iron cooking vessels should be washed in warm, soapy water to which a little soda has been added.

e. After the vessels have been washed and dried, coat them thinly and evenly with lard or a lard substitute and put them into a medium oven (325° to 400° F.) for 1 hour. This "burning in" gives a smooth, glazed surface and prevents rust. The process, often called "bluing" or "rebluing," should be repeated occasionally in order to keep a smooth surface on the cooking vessels.

f. Iron cooking vessels that have a rancid odor should be thoroughly washed with a lye solution and then reblued. Do not use lye on aluminum vessels.

g. Do not use abrasive material to clean and polish iron cooking vessels, except when necessary to remove rust.

36. Unit, Fire, M1937 (stock No. 65–J–2605)

a. GENERAL DESCRIPTION. The M1937 fire unit is a portable gasoline burner used to provide heat for the M1937 field range and the M1942 bake oven. (See fig. 43.) It is a sturdy, compact apparatus which, if cared for properly, will give

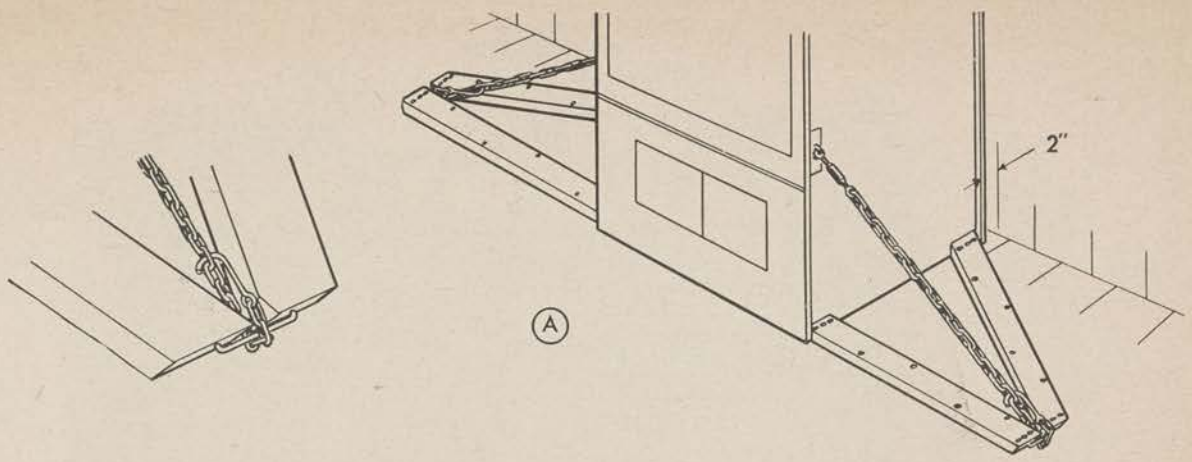

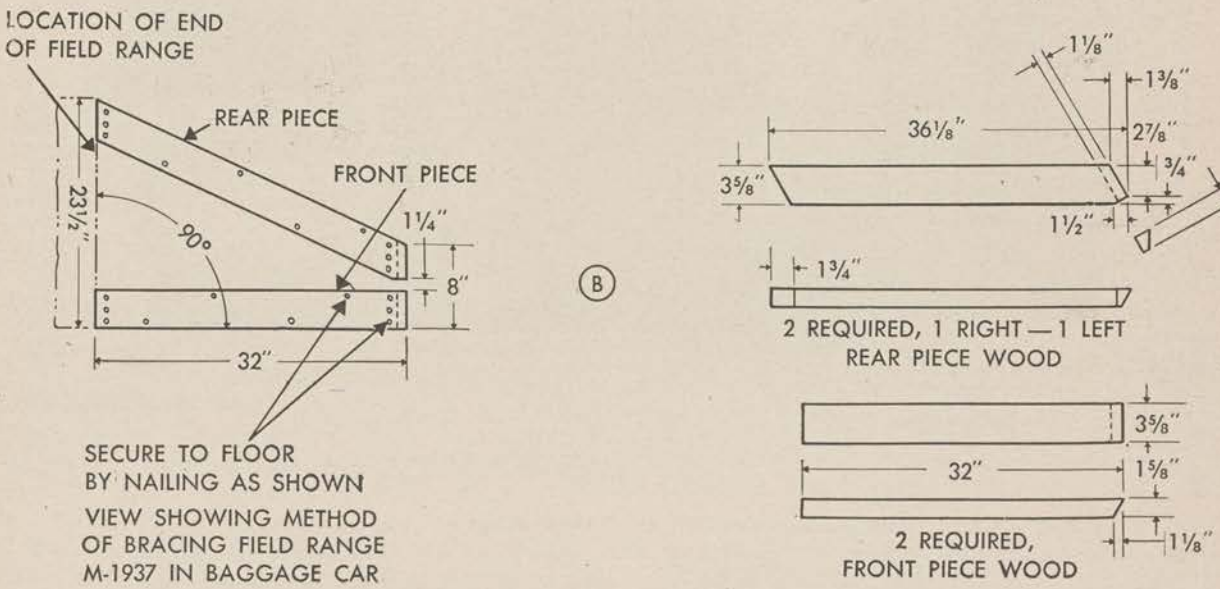

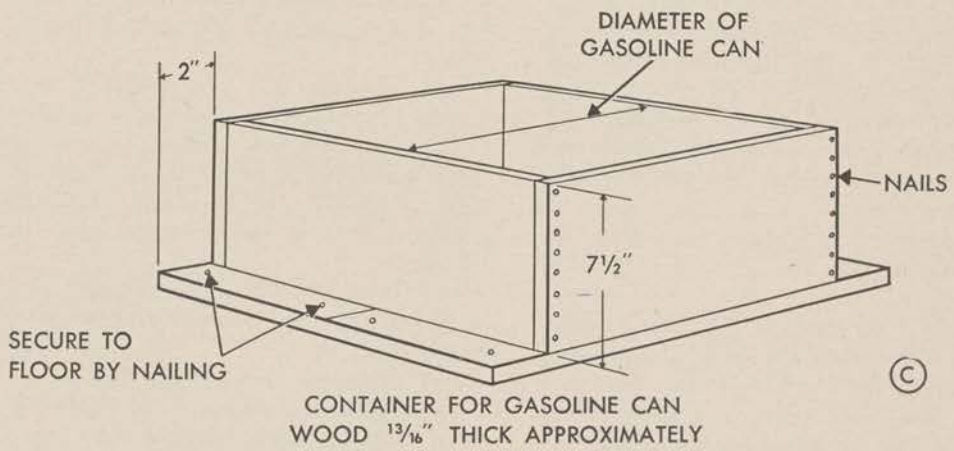

Figure 42. Detail of field range and fuel can installation in railway kitchen car.

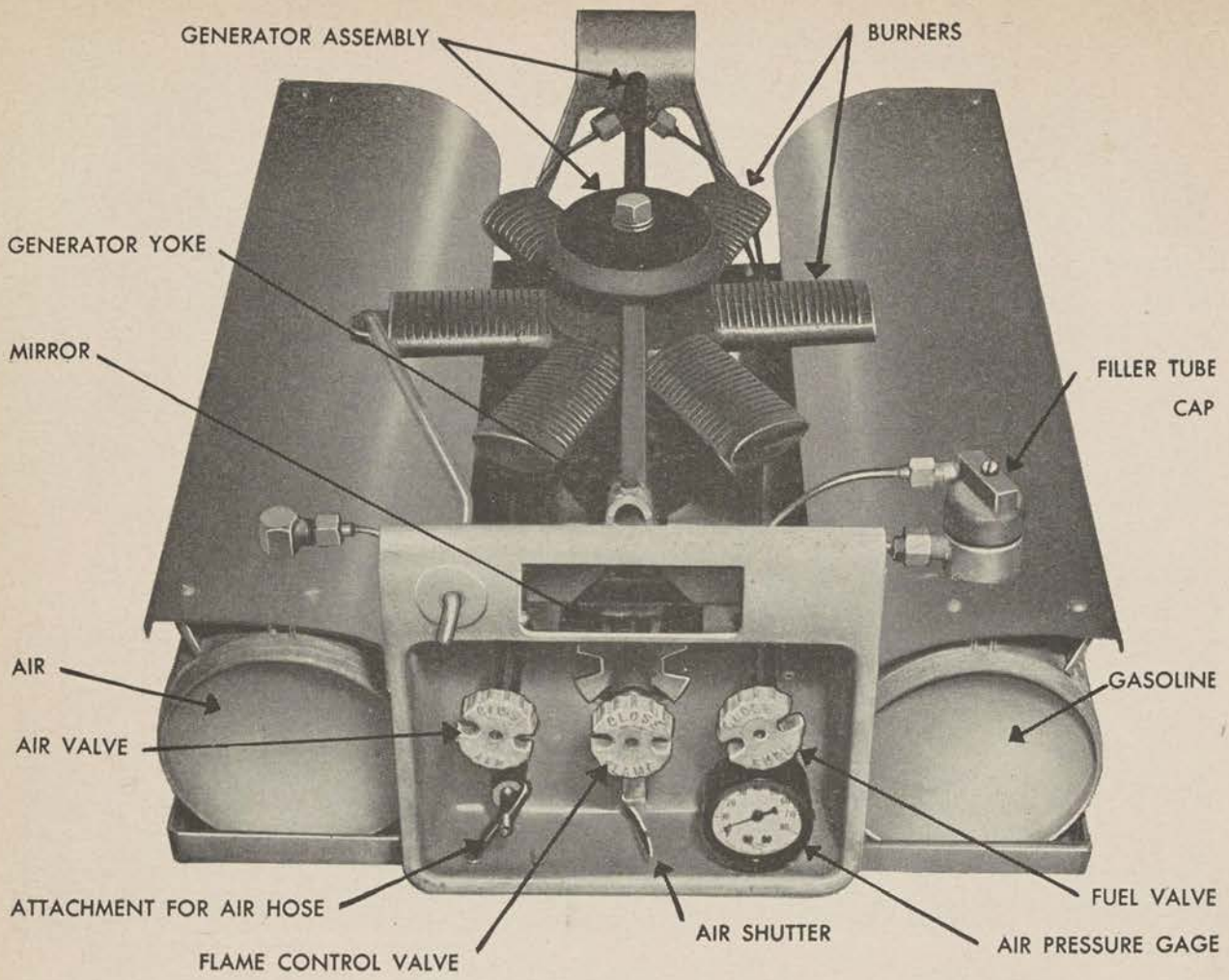

Figure 43. Unit, fire, M1937 (65-J-2605).

long and excellent service. Operated and cared for according to instructions, it functions easily and is not hazardous. (See sec. VI, app., for a list of parts for mechanical maintenance.)

b. FUEL. Only white or ethyl gasoline (motor fuel) may be used in the fire unit. The use of liquified gases, such as propane and butane, is prohibited. The fuel allowance for the fire unit (when used in the field range) is 3 gallons per day. The tank holds approximately 7 quarts, and a full tank will operate the fire unit for about 4 hours.

c. HOW TO LIGHT. (1) Make sure that all valves are closed and that the air shutter is wide open.

(2) Release the air pressure, fill the gasoline tank, replace the filler tube cap and tighten moderately. When filling the tank be sure that you are at least 20 feet away from any fire. Never refill a unit which is burning or on which the burner is hot.

(3) Open the air-input valve, pump the pressure in the air tank to 40 pounds, and then close the valve. (Sometimes it is found that pumping the pressure to 50 pounds makes it easier to maintain proper pressure throughout the cooking period.)

(4) Tilt the fire unit forward to empty the mixing chamber of accumulated gasoline.

(5) Put the fire unit into any one of the three positions in the cabinet, depending on the type of cooking to be done. Let the fire unit project about 6 inches from the front of the cabinet.

(6) Pull out the burner control rod until two of the burner arms are directly under the generator tube.

(7) Open the air valve one-half turn.

(8) Open the fuel valve one-half turn.

(9) Hold a lighted match over any arm of the

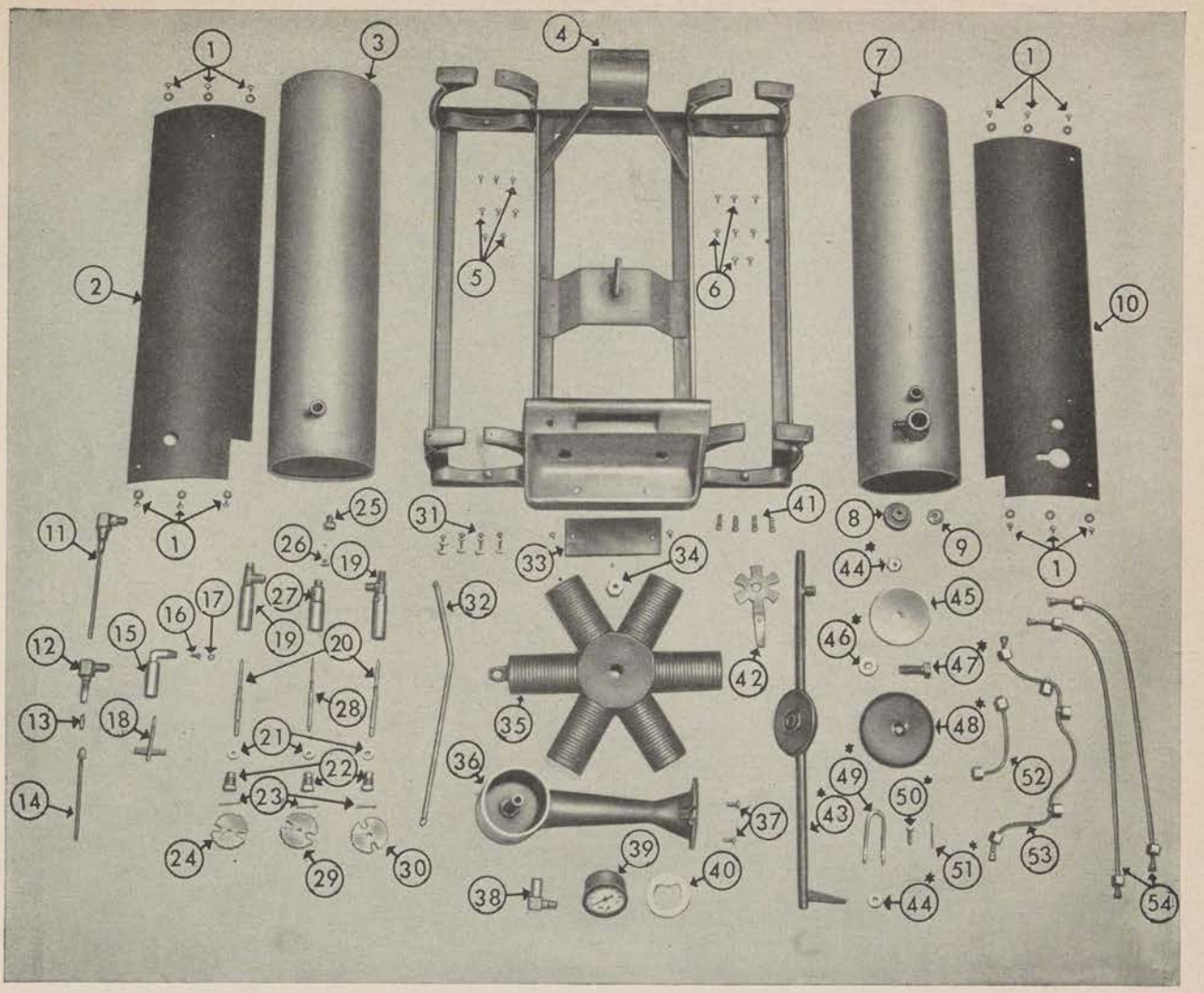

1. *Screw, self-tapping, round ¼", No. 10 (96 and 101)*
2. *Shield, air tank (109).*
3. *Tank, air (108).*
4. *Frame, fire unit (with panel) (85).*
5. *Rivet, round head, 3/16" x 3/8" (88B and 89B).*
6. *Rivet, flat head, 3/16" x 3/8" (93B).*
7. *Tank, fuel (99).*
8. *Cap, fuel tank filler tube, with plug (102).*
9. *Plug, cap, fuel tank filler tube (103).*
10. *Shield, fuel tank (100).*
11. *Elbow, air output (110).*
12. *Body, safety, fuel output valve (105).*
13. *Check, safety, fuel output valve (107).*
14. *Tube, uptake, fuel output valve (106).*
15. *Body, air input valve (120).*
16. *Check, air input valve (122).*
17. *Retainer, check, air input valve (123).*
18. *Stem, air input valve (121).*
19. *Body, air or fuel valve (129).*
20. *Stem, air or fuel valve (130).*
21. *Packing, valve stem (132).*
22. *Gland, packing, air, fuel, and flame valve (131).*
23. *Pin, cotter (136).*
24. *Knob, valve stem, air (133).*
25. *Nut, flame valve (141).*
26. *Jet, fuel (140).*
27. *Body, flame valve (138).*
28. *Stem, flame valve (139).*
29. *Knob, valve stem, flame (135).*
30. *Knob, valve stem, fuel (134).*
31. *Bolt, Stove (90).*
32. *Rod, burner control (146).*
33. *Mirror, front panel, fire unit (95).*
34. *Nut, burner (147).*
35. *Burner, fire unit (145).*
36. *Chamber, mixing (144).*
37. *Screw, machine, round head, ¼" x ½".*
38. *Elbow, air gauge (126).*
39. *Gauge, air pressure (127).*
40. *Glass, air pressure gauge (127B).*
41. *Screw, set, cup point (98).*
42. *Shutter, air (142).*
43. **Generator, tubes and body (including tube, rear (149); tube, front (150); and body, filter case (152). All parts marked with * make up generator, complete (148).*
44. **Cap, generator tube (151).*
45. *Disk, filter.*
46. **Gasket, filter case cap screw.*
47. **Screw, filter case cap, generator (155).*
48. **Cap, filter case (154).*
49. **Yoke, generator (157).*
50. **Screw, set, hanger point, 5/16" x 3/4" (158).*
51. **Pin, cotter, 3/32" x 1¼" (157B).*
52. *Tube, fuel, short (117).*
53. *Tube, manifold, complete (116).*
54. *Tube, fuel and air, long (118).*

Note: All parts marked with (*) make up generator, complete (148).

Figure 44. Parts of unit, fire, M1937 (65–J–2605).

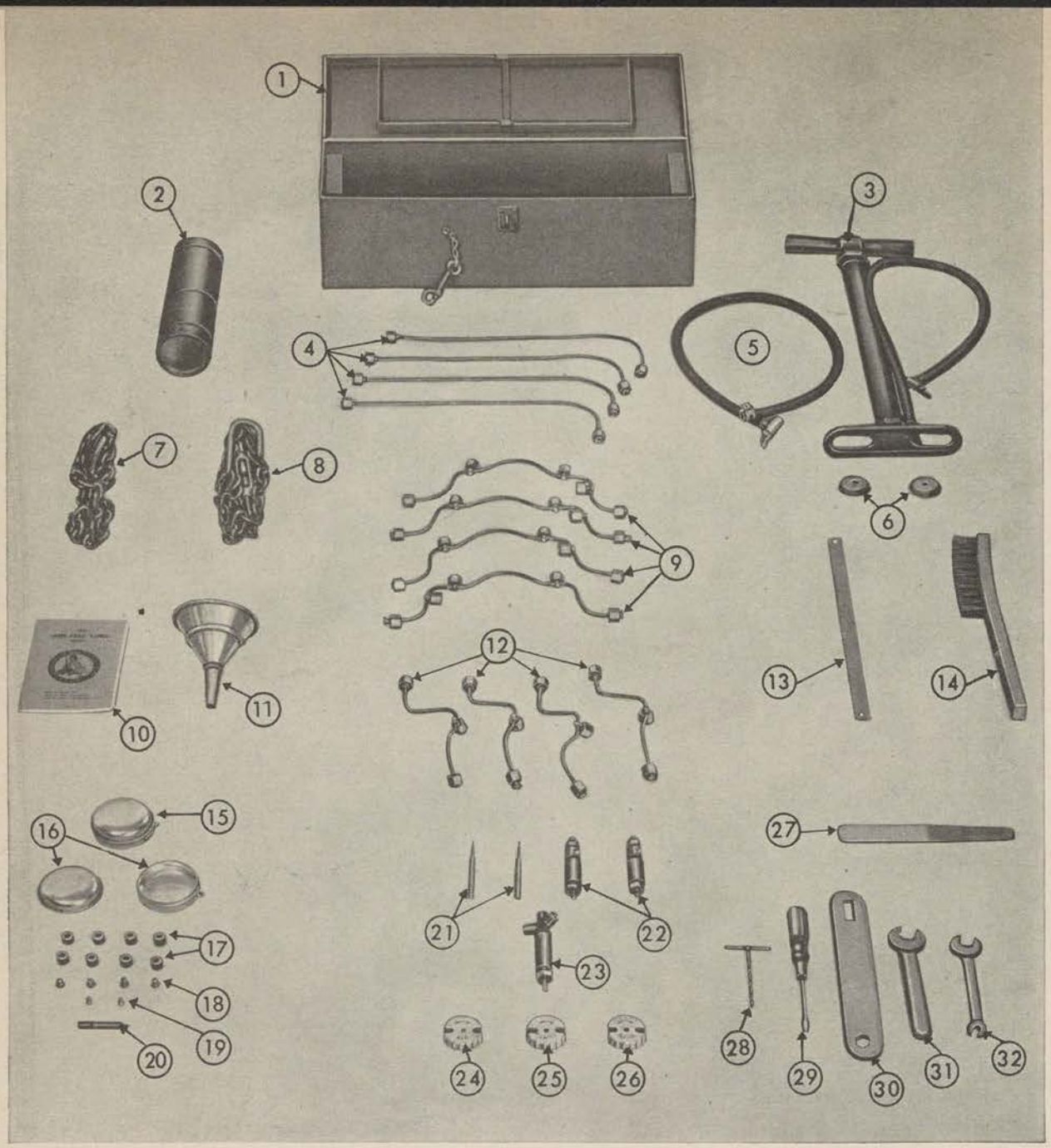

1.	65-J-1145	*Box, tool, empty.*
2.	58-E-202	*Extinguisher, fire, carbontetrachloride, 1 quart pump type.*
3.	65-J-2160	*Pump, air pressure.*
4.	65-J-2546	*Tubes, fuel or air, long.*
5.	65-J-1943	*Hose, pump, air pressure, complete.*
6.	65-J-1655	*Cups, leather, air pump.*
7.	65-J-1470	*Chains, tie-in, left.*
8.	65-J-1475	*Chains, tie-in, right.*
9.	65-J-2560	*Tubes, manifold.*
10.	65-J-1115	*Book, instruction.*
11.	64-F-540	*Funnel, with strainer, ½-quart.*
12.	65-J-2538	*Tubes, fuel, converted type.*
13.	64-B-436	*Blade, saw, butchers', length (overall) 14 1/16", center to center of holes 14".*
14.	65-J-1300	*Brush, steel wire.*
15.	65-J-1590	*Container, tin, with graphite grease.*
16.	65-J-1585	*Container, tin, small parts.*
17.	65-J-2085	*Packing, valve stem.*
18.	65-J-1962	*Jets, fuel, flame valve.*
19.	65-J-1964	*Jets, metering, mixture valve.*
20.	65-J-2230	*Reamer, fuel jet.*
21.	65-J-2487	*Stems, valve, flame.*
22.	65-J-2652	*Valves, flame.*
23.	65-J-2680	*Valve, mixture.*
24.	65-J-2015	*Knob, valve stem, with cotter pin, air.*
25.	65-J-2021	*Knob, valve stem, with cotter pin, flame.*
26.	65-J-2025	*Knob, valve stem, with cotter pin, fuel.*
27.	65-J-1565	*Cleaner, slot, burner.*
28.	65-J-1545	*Cleaner, front generator tube.*
29.	41-S-1101	*Screwdriver, common, normal duty, single grip, length of blade 3".*
30.	65-J-3693-20	*Wrench, screw cap, filter case.*
31.	65-J-2690-45	*Wrench, open end, 5/8".*
32.	65-J-2696	*Wrench, set screw, 5/16".*

Figure 45. Tool box, tools, and spare parts for range, field, M1937.

burner. *Caution:* Do not hold your hand over the burner.

(10) Open the flame control valve one-half turn. The flame should form in a few seconds.

(11) Maintain a clear green flame by adjusting the air valve.

(12) Push the fire unit all the way back into the cabinet.

(13) Open the sliding shutter in the lower cabinet door and close the door.

(14) As the generator heats, gradually close the air valve, but do not allow the flame to become yellow. Keep it green.

(15) Push the burner control rod all the way in.

d. How to keep it burning. (1) If the flame is blue, close the air shutter valve until the flame becomes green.

(2) Watch the flame closely in the mirror and use the air shutter to control flame color. If the shutter is kept too far open, the burner will become red hot.

(3) Control the size of the flame with the flame control valve. If the jet is clean, a full sized flame is produced when the flame valve is opened about one-half turn.

(4) Unless it is extremely cold (below 20° F.) leave the sliding shutter in the cabinet door open when the fire unit is operating inside the cabinet. Leave the side vents in cabinet wall open unless there is a strong wind which interferes with the flame.

(5) Do not let the air pressure fall below 30 pounds or rise above 50. If the pressure rises above 50, allow some of it to escape through the air valve.

(6) Put out the flame by closing the fuel valve. If you put out the flame by closing the flame valve, you must open it as soon as the flame goes out or it will stick.

(7) Do not tilt or move the fire unit while it is burning, except in the event of an accident. In case gasoline is spilled on the unit and catches fire, however, remove the fire unit from the cabinet immediately by the use of a hay hook. Put out the fire with the fire extinguisher, aiming it at the base of the flame.

(8) When relighting a hot unit which has been turned off in order to place it in another position in the cabinet, use only 35 pounds of air pressure. Close all valves, leave the burner control rod in, and light the burner in the usual manner.

e. Cleaning and maintenance. Responsibility for cleaning and maintenance is defined in paragraph 35*a* and *b*. A thorough knowledge of the many parts in the fire unit (see fig. 44) and of the contents of the tool box (see fig. 45) is essential for all personnel concerned with maintenance. (See sec. VI, app., for a list of maintenance parts).

(1) *How to clean filter case* (see fig. 46). (1) *a* The M1937 fire unit may be equipped with one of two types of filters. The instructions contained in this paragraph are applicable to the original type only. The new type, issued with the two new conversion sets, is discussed in paragraph 37.

(*b*) When ethyl gasoline is used, insert a new filter disk after each tankful used, and clean the fuel jet after each day of cooking operations. If white gasoline is used, clean the fuel jet and insert a new filter disk every other day. (When the fire unit is used in the field bake oven M1932, more frequent cleaning may be necessary.)

(*c*) To change the filter disk, remove the filter cap screw and lift out gasket and filter cap. Take out the dirty filter disk. (See fig. 46.)

Caution: This dirty filter disk is covered with lead compounds which are DEADLY POISON. Dispose of it carefully, preferably by burying it. Be sure that it does not come into contact with food or water.

(*d*) Clean the inside surfaces of the filter case with the wire brush.

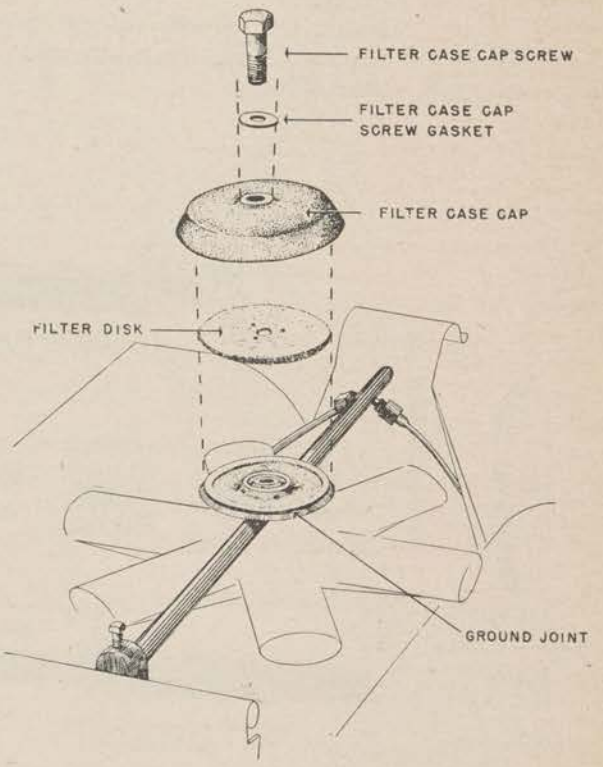

Figure 46. Original filter assembly, unit, fire, M1937.

(*e*) Insert the new filter disk and reassemble.

(*f*) Two types of filter disks are available.

Note: The new type should be soaked in gasoline at least 20 minutes before use.

(2) *How to clean passages in generator.* (See part No. 148, fig. 44.)

(*a*) To remove the generator, remove the filter case cap. Unscrew and remove the generator tube caps at each end of the generator tube. Unscrew the unions of the air and the fuel tubes from the generator. (See fig. 43.) Loosen the generator yoke screw, slide back the yoke, and remove the generator. Do not remove the generator tubes from the filter case body.

(*b*) Clean the passages in the generator with the generator cleaner (see part No. 212, fig. 44), a long piece of wire. After using the cleaner, remove all loose dirt from the passages by holding the tubes in the air and tapping them gently, or by blowing through the passages with the air pump.

(3) *How to clean fuel jet and flame valve stem.* (see fig. 47). (*a*) After the generator assembly has been removed from the fire unit (see (2) above) pull the flame control valve (see fig. 43) out of the panel.

(*b*) Take off the air shutter.

(*c*) Open the flame valve about one turn. Remove the flame valve nut.

(*d*) Remove the fuel jet from the nut and clean the jet with the reamer. Never insert any tool or wire into the front end of the jet.

(*e*) Screw out the packing gland and flame valve stem. Clean the valve stem with the wire brush, being careful not to drop or injure it in any way.

(*f*) Clean the socket in the flame valve body with the wire brush and reassemble all parts. Do not use the reamer.

(*g*) Replace the air shutter.

(*h*) Replace the valve in the panel. Be sure that the small pin on the valve body enters the slot on the front panel.

(4) *Miscellaneous.* (*a*) When you assemble the generator, be certain that the ground joint surfaces are entirely free from dirt. Put a small amount of grease on the thread near the end of the filter case cap screw, and on the under surfaces of the copper gasket on the screw. Do not put any grease on the ground joint or on the asbestos filter disk.

(*b*) Clean the burner arms frequently with the wire brush, and clean them every day with the burner slot cleaner. (See part No. 211, fig. 44.)

(*c*) Clean the mirror with a wet cloth. Do not use scouring material of any kind.

(*d*) Never screw the filter case cap screw too tight.

(*e*) If the ground joint has been injured, reseat with valve grinding compound. Do not grind more than necessary.

(*f*) Never tighten any nuts or screws on the fire unit excessively. Always use the proper wrenches, never Stillson wrenches or pliers.

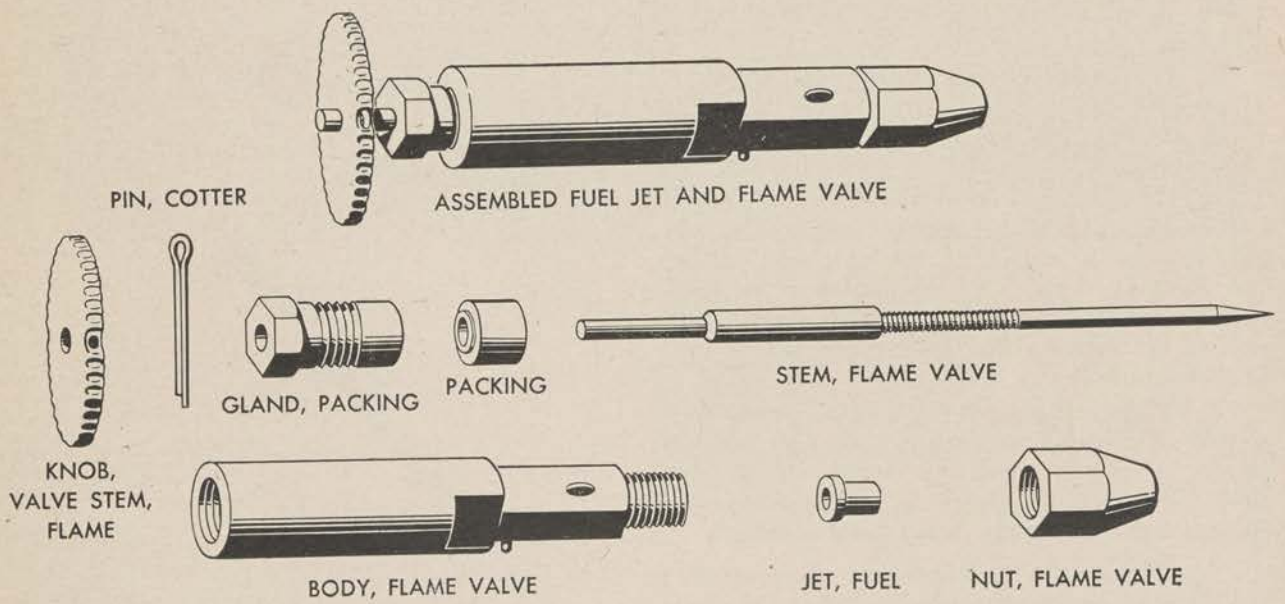

Figure 47. Fuel jet and flame valve assembly, unit, fire, M1937.

37. Conversion Sets for M1937 Fire Unit

a. GENERAL DESCRIPTION. (1) A conversion set (set, conversion, for unit, fire, range, field, M1937, set No. 2 (simplified)) is now being issued to replace the original filter, and filter assembly and generator on the M1937 fire unit (see fig. 48). The new combination generator-filter is a steel tube filled with steel wool and sealed. A set consists of three conversion generator-filters, one for current operation and two spares, together with the necessary fittings.

(2) Component parts (see fig. 49) of set, conversion, for unit, fire, range, field, M1937, set No. 2 (simplified) (stock No. 65–J–2377):

Item No.	Stock No.	Components	Quantity
1	65–J–1545	Cleaner, front generator tube (conversion set No. 2), part No. 260	1
2	65–J–1857	Generator, fire unit (conversion sets Nos. 1 and 2), part No. 257	3
3	65–J–1962	Jet, fuel, flame valve (conversion sets Nos. 1 and 2), part No. 264	2
4	65–J–1964	Jet, metering, mixture valve (conversion set No. 2), part No. 262	2
		Pamphlet, instruction	1
5		Plate, instruction, maintenance	1
6		Plate, instruction, procedure	1
7	65–J–2393	Shield, starting, (conversion set No. 2), part No. 259	1
8	65–J–2487	Stem, valve, flame (conversion sets Nos. 1 and 2), part No. 265	2
	65–J–2488	Stem, valve, mixture, (conversion set No. 2)	1
9	65–J–2438	Tube, fuel (conversion set No. 2), part No. 266	1
10	65–J–2652	Valve, flame (conversion sets Nos. 1 and 2), part No. 263	1
11	65–J–2680	Valve, mixture, (conversion set No. 2), part No. 261	1
12	65–J–2688–70	Wire, steel, soft, 1/16″ diameter, 10″ long, part No. 258	4
13	65–J–2700	Yoke, generator, part No. 157 Body, generator yoke	1
		Pin, cotter, bevel point, 3/32″ x 1 1/4″, N.C.T.S.	
14	65–J–2370	Screw, set, steel, hanger point 5/16″ x 3/4″ N.C.T.S., part No. 158	1

(See sec. VI, app., for a list of parts for mechanical maintenance.)

(3) An early type of conversion set has also been issued and may be found on a certain number of fire units. The two conversion sets are similar in many respects. Instructions contained in this paragraph deal specifically with the set No. 2 (simplified), but they also apply to the early conversion set except where differences in procedure are noted and explained.

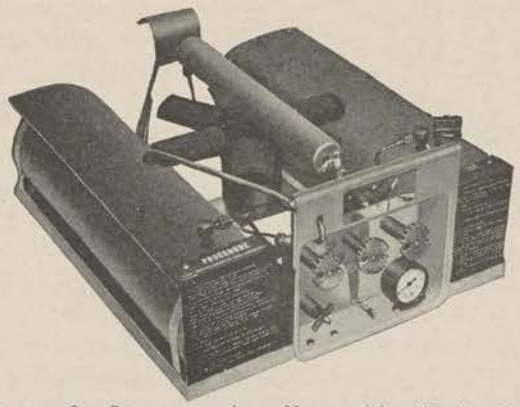

Figure 48. Set, conversion, No. 2 (simplified) (65–J–2377), installed.

b. ADVANTAGES. The conversion combination generator-filter has two major advantages over the old type of generator and filter:

(1) The original type filter disk must be replaced at frequent intervals. The conversion generator-filter will operate from 200 to 300 hours.

(2) The original generator and filter need to be cleaned after about 18 hours of operation. The conversion filter tube leading to the flame valve and the flame valve assembly need cleaning only after 50 or more hours of operation.

c. DISMANTLING OF FIRE UNIT FOR INSTALLATION OF CONVERSION SET NO. 2 (SIMPLIFIED). (See fig. 50). (1) Release all air pressure by slowly removing the filler tube cap (102).

(2) Remove the old generator (148) and yoke (157).

(3) Remove the short fuel tube (117-tank to fuel valve) by unscrewing both union nuts.

(4) Remove the burner control rod (146).

(5) Remove the air tube (118) by unscrewing the union nut at the air valve.

(6) Remove the air valve (128) in the following manner:

(*a*) Pull out the cotter pin and remove the air valve knob from the stem.

(*b*) Loosen the air valve set screw on the back of the front panel.

(*c*) Disconnect the manifold union nut from the air valve. Use the burner control rod to press the shield back out of the way when you are removing this nut.

(*d*) Push the air valve back through the front panel.

(7) Remove the flame valve (137).

(*a*) Detach the valve assembly from the front panel.

(*b*) Remove the air shutter (142) from the flame valve.

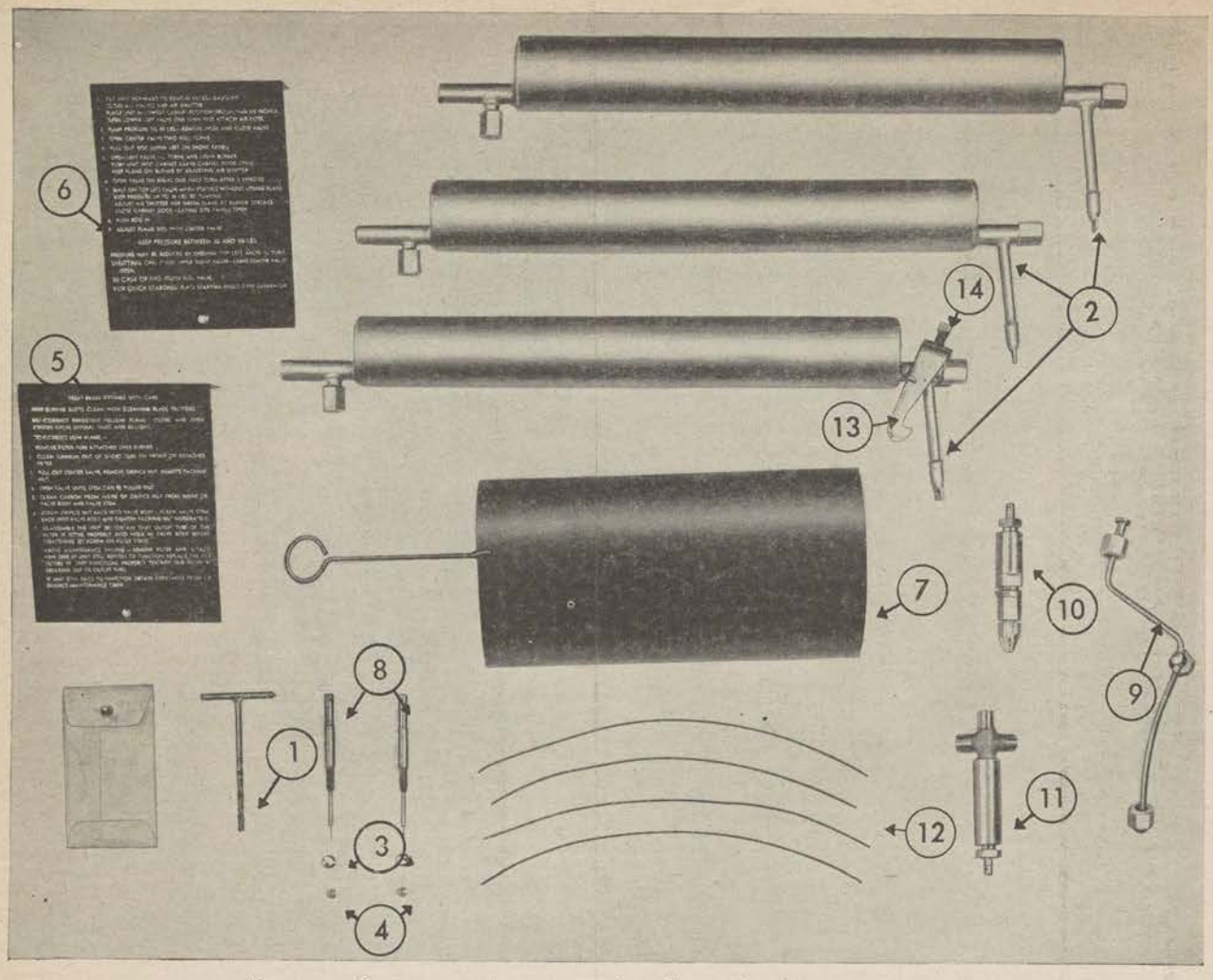

Figure 49. Components of set, conversion, No. 2 (simplified) (65-J-2377).

(*c*) Pull out the cotter pin and remove the flame valve knob from the stem.

Note: The burner control rod, the air tube, the air valve knob, the flame valve knob, and the air shutter will be replaced on the unit in addition to the new parts.

d. INSTALLATION OF CONVERSION SET NO. 2 (SIMPLIFIED) (see fig. 51). (1) Install the mixture valve (261) into the socket from which the air valve was removed.

(*a*) Insert the valve from the rear of the panel, turning it so that the left side outlet is in line with the union nut on the manifold and the right side outlet is pointing upward.

(*b*) Connect the union nut on the manifold tube to the left side outlet of the mixture valve. Tighten the mixture valve set screw firmly against the valve; then tighten the manifold union nut moderately with the wrench.

(*c*) Install the old air valve knob on the mixture valve stem.

(2) Install the new fuel tube (266). Connect the union nut on one end to the fuel tank elbow. Connect the center union nut to the side outlet of the fuel valve and the union on the other end to the right side outlet on the mixture valve.

(3) Install old air tube (118). (*a*) Bend the tube with a short return bend about 4 inches from one end.

(*b*) Make a short return bend about $1\frac{1}{2}$ inches from the other end, so that the tube will be shaped something like the letter S.

Note: Be careful not to bend the tube too sharply, as it may flatten out at the end and prevent the flow of air.

(*c*) Connect the union nut on the 4-inch bend to the outlet union at the end of the mixture valve. Keeping the bend of this loop beneath the burner arm, raise and twist the other bend of the tube

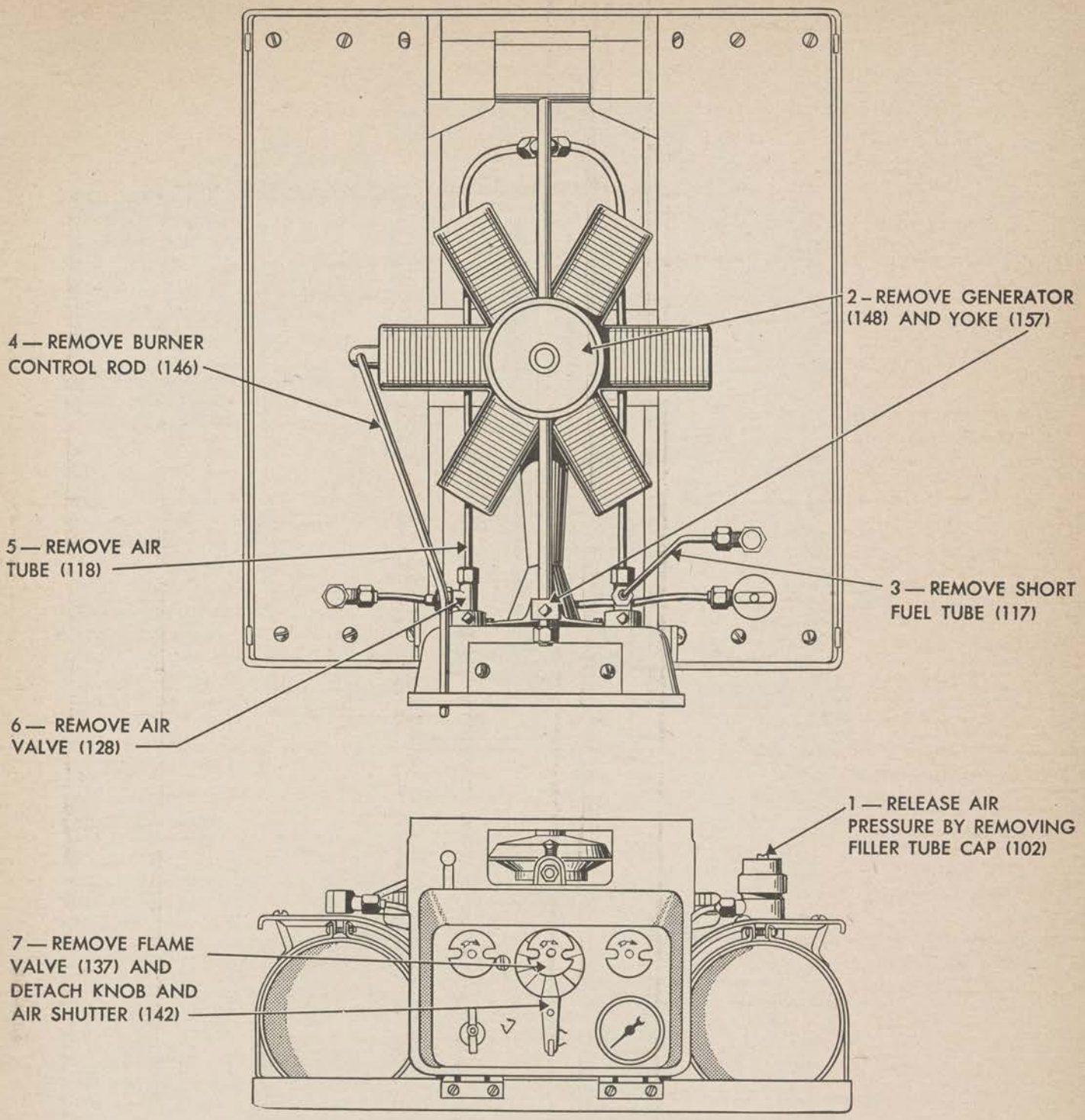

Figure 50. Dismantling unit, fire M1937, to install set, conversion, No. 2 (simplified).

approximately as shown in figure 48. The nut on the end of the tube should be in line with the front generator tube when the generator is in place.

(4) Install the new flame valve (263).

(*a*) Place the old flame valve knob on the new flame valve stem and secure it by means of the cotter pin.

TEXAS STATE COLLEGE FOR WOMEN
LIBRARY

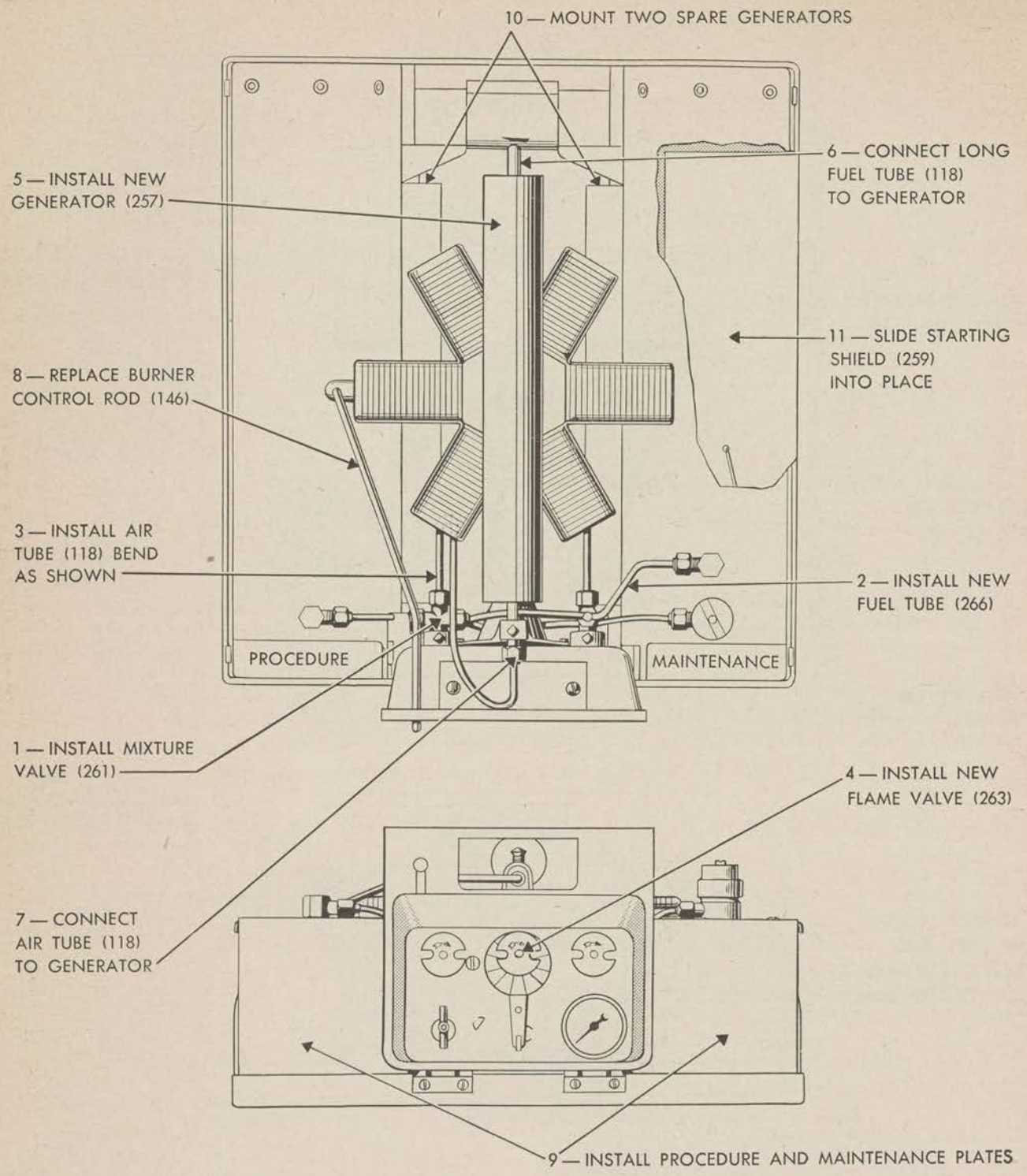

Figure 51. Installation of set, conversion, No. 2 (simplified) (65-J-2377).

(*b*) Place the old air shutter on the flame valve body and insert the valve into the flame valve socket in the front panel.

(5) Install the new generator (257).

(*a*) Remove the cardboard protection sleeve from the hot vapor tube and the two protection nuts from the ends of the generator.

(*b*) Remove the cotter pin from the generator yoke and slide the yoke back over the front generator tube. Replace the cotter pin in the yoke so that it is behind the hot vapor tube. Put the generator in place, engage the yoke hooks, and tighten the yoke set screw moderately.

(6) Connect the old long fuel tube (still attached to the fuel valve) to the union at the rear of the generator and tighten the union nut moderately to prevent leaks. The fuel tube will have to be bent slightly to line up with the union.

(7) Connect the old air tube (see (3) above) to the front generator tube. After making this connection, be certain that the lower bend of the tube is below the burner arm and that the burner can be rotated without striking or rubbing the tube. Check this by turning the burner a full turn.

(8) Replace the burner control rod (146).

(9) Install the PROCEDURE and MAINTENANCE instruction plates by removing the two outside screws, one on each side of the fire unit, which hold the tank shields to the tank brackets. Place the "Procedure" plate in front of the air tank so that the hole in the plate is in line with the hole in the shield, and replace the screw. Attach the "Maintenance" plate in the same manner in front of the fuel tank.

(10) Mount the two spare generators on the fire unit frame.

(*a*) Keep the hot vapor tubes of the generators to the rear, pointing upward, and slide the generators in between the legs of the mixing chamber support brackets and the tanks (one generator on each side).

(*b*) Move the generators forward until the hot vapor tubes are even with the generator support bracket (rear lifting handle) and leaning against it.

(*c*) Tie one of the wires (258) around the front tube of each generator and the generator support bracket. Tie another wire around the rear tube and the burner support bracket bar.

(11) Slide the starting shield (259) over the fuel tank in the space between the fuel tank and the tank shield. When quick starting is desired, place the starting shield over the generator.

(12) Do not discard the air valve. Keep it as a replacement part for the fuel valve, as these two valves are identical. Retain generator yoke for an emergency spare. Return to stock, or salvage other discarded parts in accordance with existing regulations.

Important: Test all connections for leaks. If any leaks are discovered, make certain that they are stopped before the fire unit is lighted. Do not immerse the fire unit in water to test for leaks.

e. LIGHTING THE FIRE. (1) Tilt the unit forward to remove excess gasoline.

(2) Close all valves and the air shutter.

(3) Place the unit in any one of the three positions in the range cabinet, projecting about 6 inches.

(4) Open the lower left valve one turn, attach the air hose, and pump the pressure to 45 pounds. Remove the hose and close the valve.

(5) Open the center valve (flame) two full turns.

(6) Pull out the burner control rod (upper left on front panel).

(7) Open the left valve (mixture valve, air knob) one and one-half turns. (This is the air valve on the early conversion set.)

(8) Hold a lighted match over any arm of the burner and light the fire unit. Be careful not to hold your arm over the burner.

(9) Push the fire unit all the way into the range cabinet. Leave the cabinet door open.

(10) Maintain the flame on the burner by adjusting the air shutter.

(11) After 3 minutes, open the valve on the right (fuel valve) one-half turn.

(12) Shut off the top left valve (mixture valve, air knob) when it is possible to do so without losing the flame. (Air valve on early model.) Keep the pressure between 30 and 50 pounds by pumping. If necessary, pressure may be reduced by opening the top left valve one-quarter turn.

(13) Maintain a green flame on the burner by adjusting the air shutter. Close the cabinet doors, leaving the side panels open.

(14) Push the burner control rod in.

(15) Control the size of the flame with the center valve (flame valve).

Important: For quick starting of the set No. 2 (simplified), place the starting shield over the generator.

f. EXTINGUISHING THE FIRE. To shut off the fire unit, close the upper right valve (fuel valve); leave the flame valve open.

g. ACCIDENTAL FIRE. In the event of accidental fire, close the flame valve.

h. MAINTENANCE. (1) Always have at least one spare filter attached.

(2) Keep the burner slots clean with the cleaning blade provided.

(3) To correct persistent yellow flame, close and open the flame valve several times. Then relight the burner.

(4) To correct low flame:

(*a*) Remove the filter tube attached over the burner.

(*b*) Clean carbon out of the short tube on the front of the detached filter.

(*c*) Pull out the center valve (flame valve) and remove the orifice nut and packing nut.

(*d*) Open the valve until the stem can be pulled out.

(*e*) Clean the carbon from the inside of the orifice nut, from the inside of the valve body, and from the valve stem.

(*f*) Screw the orifice nut back into the valve body. Screw the valve stem back into the valve body and tighten the packing nut moderately.

(*g*) Reassemble the unit. Before you tighten the set screw on the filter yoke, be sure that the outlet tube of the filter is fitted properly into the hole of the valve body.

(5) If the maintenance described above fails, remove the filter and attach a new one. If the fire unit still does not function properly, the trouble is not in the filter set; in this event put the old filter back in the unit. If the unit does function properly after the new filter is attached, the old filter must have been defective; in this event, destroy the old filter by breaking its outlet tube.

(6) When necessary, obtain assistance from shop facilities which are authorized to repair field range components.

(7) See section VI, appendix, for a list of parts for mechanical maintenance.

38. Heater, Water, for Range, Field, M1937

a. Two types of water heaters have been approved for issue with the M1937 field range. One of these heaters uses the M1937 fire unit; the other uses a downdraft burner. (See par. 39.)

b. The heater, water range, field, M1937 (stock No. 65–J–1912) (see fig. 52) consists of the following items:

Stock No.	Components	Quantity
42–C–1740	Can, corrugated, nesting, galvanized, with cover, 24-gallon	1
65–J–1450	Case, water heater	1
65–J–2390	Shield, case, water heater	1
65–J–2605	Unit, fire	1

(See sec. VI, app., for a list of parts for mechanical maintenance.)

c. To operate the water heater—

(1) Open the stand and place a can of water on top of it.

(2) Put the shield around the can and be sure that the can is in place.

(3) Insert the fire unit into the case and operate it according to the instructions given in paragraph 36.

d. Maximum allowances of water heater assemblies (M1937 fire unit) are three such assemblies for each one-cabinet, two-cabinet, three-cabinet, and four-cabinet range. Water heater assemblies are requisitioned separately from the field range M1937 and the basis for issue must be shown in each case.

39. Heater, Immersion Type, for Cans, Corrugated, Complete with 24-Gallon Can and Cover

a. The heater, immersion type, for cans, corrugated, complete with 24-gallon can and cover (stock No. 65–J–1911–70) is a new type of water heater, employing the principle of the downdraft burner. (Heater only, stock No. 65–J–1911–50.) (See figs. 53 and 54.) (See par. 19*a*.) By means of a large baffle plate, the heat is made to circulate over the entire bottom of the can.

b. Component parts of the immersion type water heater are as follows:

Stock No.	Components	Quantity
43–B–23862	Bolt, stove, steel, N.C.T.S., oval countersunk head, without nut, class I fit, $\frac{3}{16}$″ x $\frac{3}{4}$″	3
65–J–1312–30	Burner, assembly, heater, immersion, can, corrugated	1
42–C–1740	Can, corrugated, nesting, galvanized, with cover, 24-gallon	1
65–J–1847–30	Gate, draft, heater, immersion, can, corr.	1
65–J–1911–50	Heater, immersion type, for can, corr.	1
65–J–2066–30	Lifter, draft gate, heater, immersion, can, corrugated	1
65–J–2066–50	Lighter, burner, heater, immersion, can, corrugated	1
43–N–11398	Nut, wing, steel, threaded, N.C.T.S., $\frac{3}{16}$″	3
43–N–11402	Nut, wing, steel, threaded, N.C.T.S., $\frac{5}{16}$″ (for fuel tank clamp)	1
65–H–2272	Pipe, stove, joint or section, straight, 4″	4
65–J–2139–30	Plug filler, heater, immersion, can, corrugated	1
43–S–19558	Screw, thumb, steel, threaded, N.C.T.S., $\frac{3}{8}$″ x 2″	1
65–J–2510	Tank, fuel, heater, immersion, can, corrugated	1
65–J–2676–30	Valve, gasoline, heater, immersion, can, corrugated	1

(See section VI, appendix, for a list of parts for mechanical maintenance.)

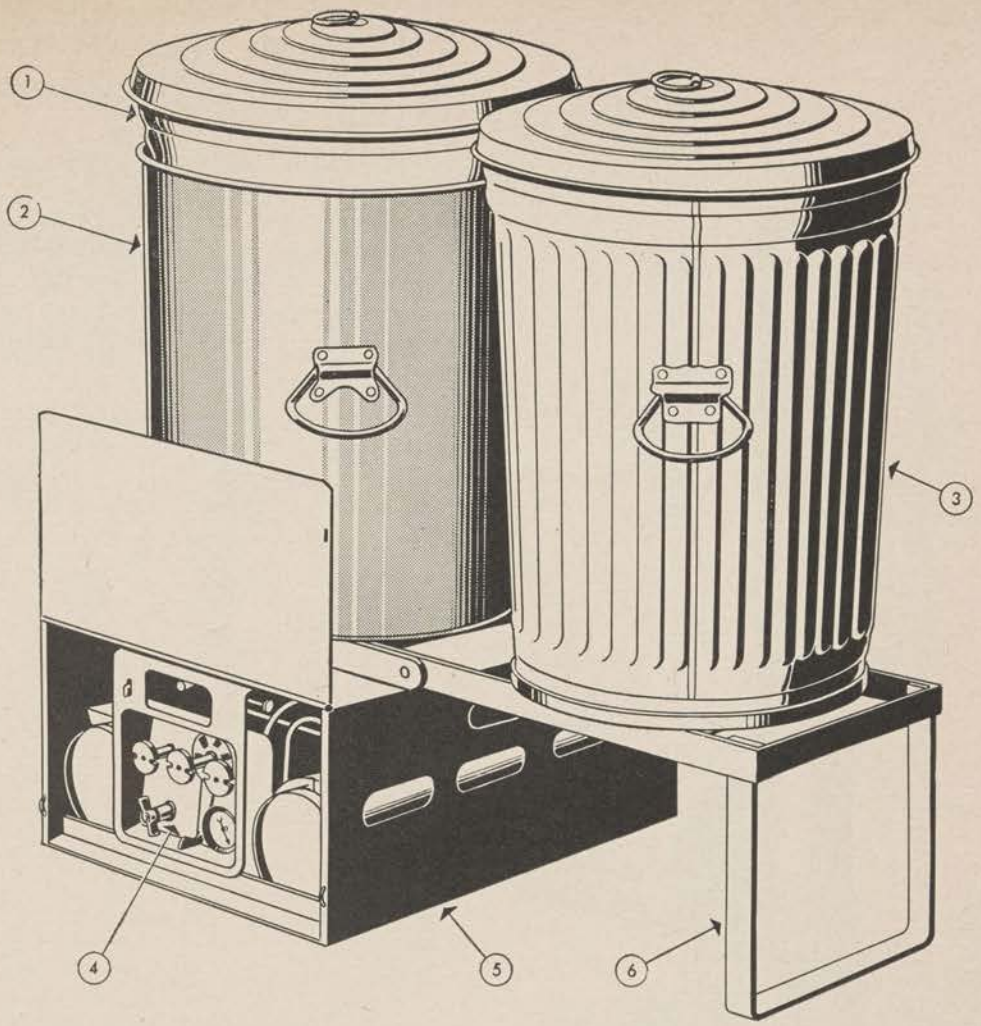

1. *Can, corrugated, 24-gallon.*
2. *Shield, water heater.*
3. *Extra can, corrugated, 24-gallon (not issued with heater).*
4. *Unit, fire M1937.*
5. *Case, water heater.*
6. *Stand (part of case).*

Figure 52. Heater, water, for range, field, M1937 (65-J-1912).

c. The heater rests inside a standard corrugated can with a fuel tank fastened to the top of the can.

d. To install the heater, place the base and the burner assembly into a can, and fasten the heater firmly to the side of the can by use of the hanger and thumb screw. Attach all four sections of the stovepipe. The high stovepipe improves the draft and speeds the heating.

e. To operate the heater—

(1) Fill the fuel tank with gasoline, kerosene, or fuel oil.

(2) Open the hood and pull up the draft gate lifter to open the gate.

(3) Saturate the lighting torch with gasoline and ignite. In order to start the draft, insert the torch down the body of the heater and through the draft gate which opens into the stack.

(4) Remove the torch from the stack and rest it on the generating unit.

(5) Push the draft gate lifter down to close the gate.

(6) Open the fuel valve slightly for a drip flow, not a stream. The burner will light quickly.

(7) Allow the torch to burn out and then remove it from the heater.

Caution: Do not remove the torch while it is still burning or it will ignite the fuel at the valve.

(8) Open the fuel valve to adjust the flame to desired intensity. Be sure that the burner is well heated before the valve is adjusted or the burner will be flooded.

(9) Close the hood.

f. Disassemble the burner occasionally and clean the dirt from the vaporizer and the burner top plate.

g. Check the drip valve frequently to be sure that it is not stopped up.

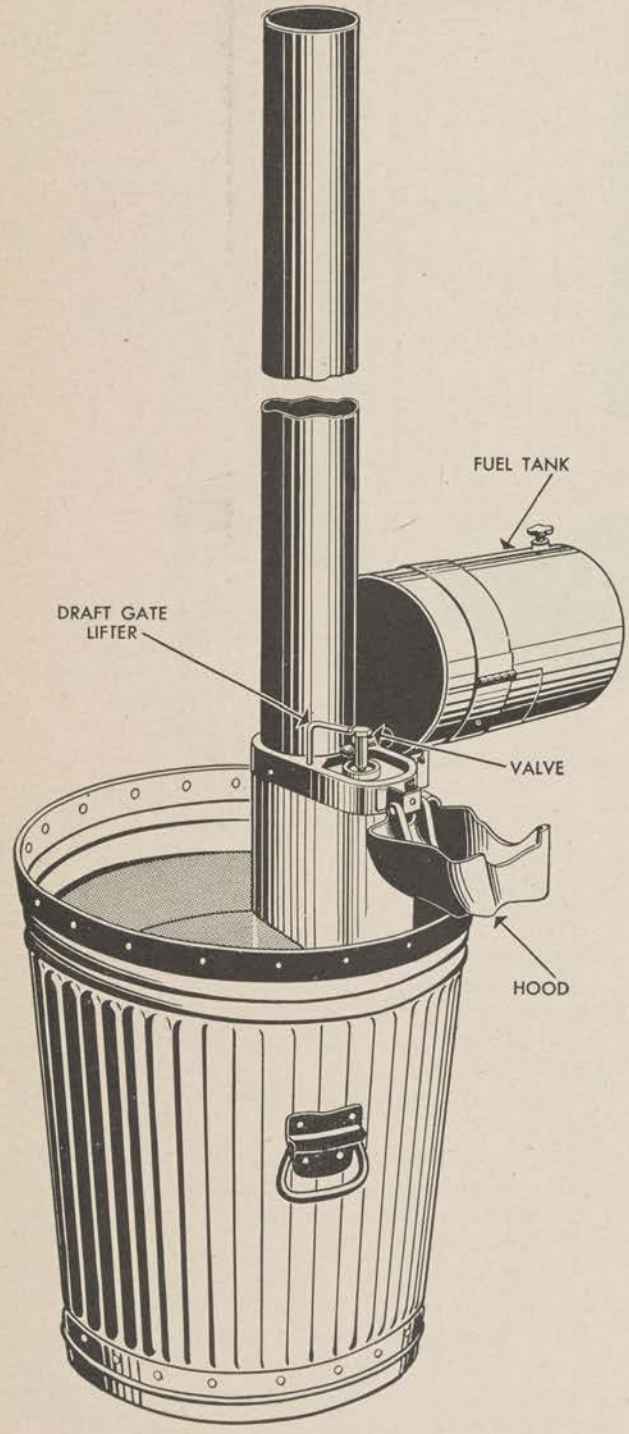

Figure 53. Heater, immersion type (65–J–1911–70).

h. The capacity of the fuel tank is approximately 2½ gallons. Though the heater will burn gasoline, kerosene, or fuel oil, fuel oil may produce some smoke. As a general rule, however, smoke indicates a waste of fuel.

i. Maximum allowance of heaters, immersion type, is three such heaters for each one-cabinet, two-cabinet, three-cabinet, and four-cabinet unit of the field range M1937. Requisitions for water heaters will be filled with either this type of heater or the type described in paragraph 38. (See sec. VI, app., for a list of parts for mechanical maintenance.)

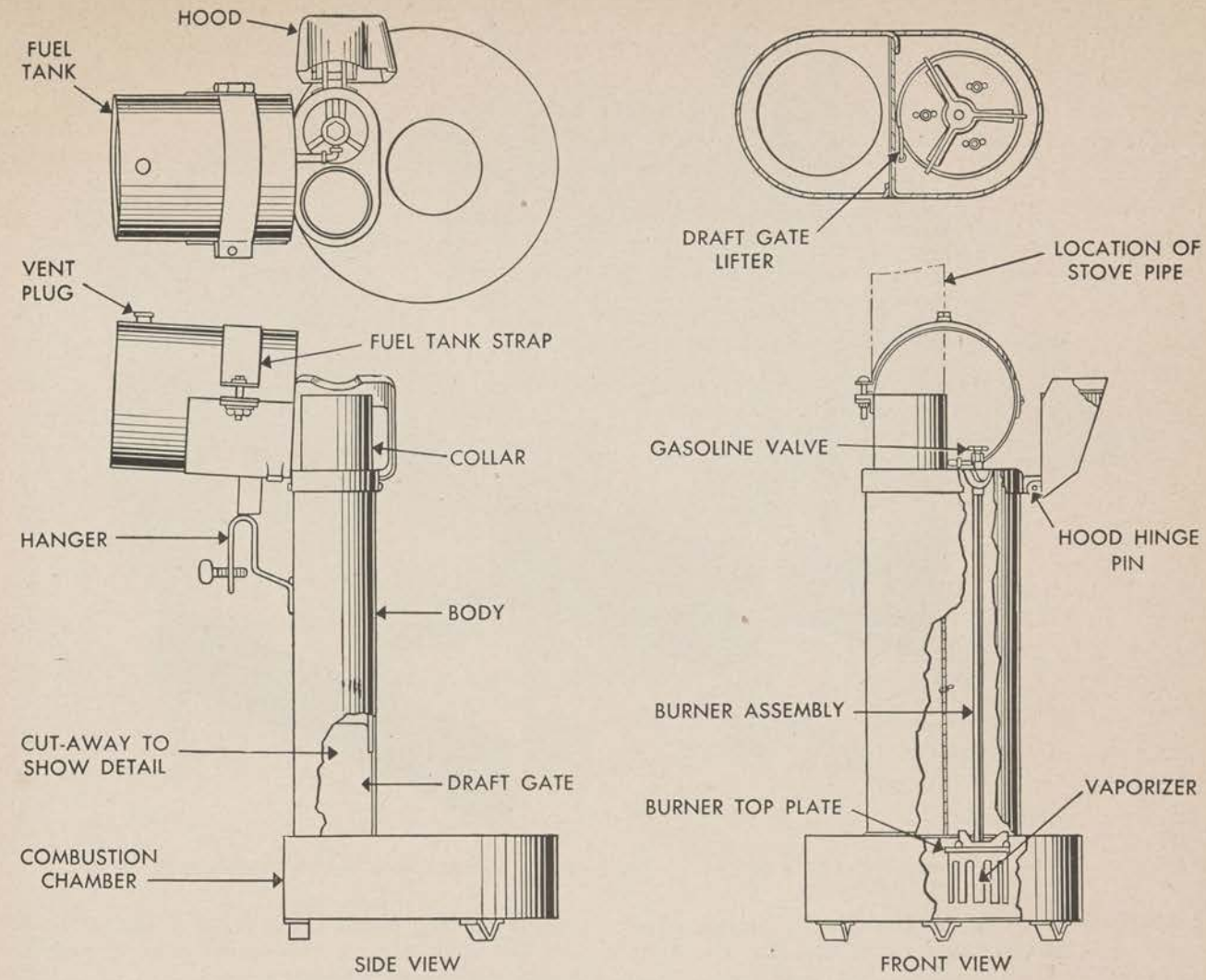

Figure 54. Detail of heater, immersion type (65–J–1911–70).

Section II. RANGE, ARMY FIELD, NO. 1

40. Description

a. The Army field range No. 1 (stock No. 65–B–1095) is a wood-burning range consisting of two major parts, an oven and a boiling plate, together with two additions to the boiling plate called Alamo attachments. (See figs. 55 and 56.) The range with attachments is designed to cook for 150 men.

b. Cooking vessels for the range include six boilers of graduated sizes, with covers, and two bakepans. Other necessary utensils are also provided. A list of these components and utensils is given in section VIII, appendix. (See also fig. 57.)

41. Installation

a. To set up the range, level the ground selected and place the oven and the boiling plate side by side, so that the oven door and the firebox door are at the same end.

b. Draw together the two Alamo attachments (stamped with part Nos. 42A and 42B) and secure the bar lock. Now insert the boiling plate (part Nos. 42 into 42A) and rest Alamo attachment (42B) securely on the angle iron at the rear of the oven.

c. Tamp a little earth along the sides and the closed ends to prevent the escape of gases, but do

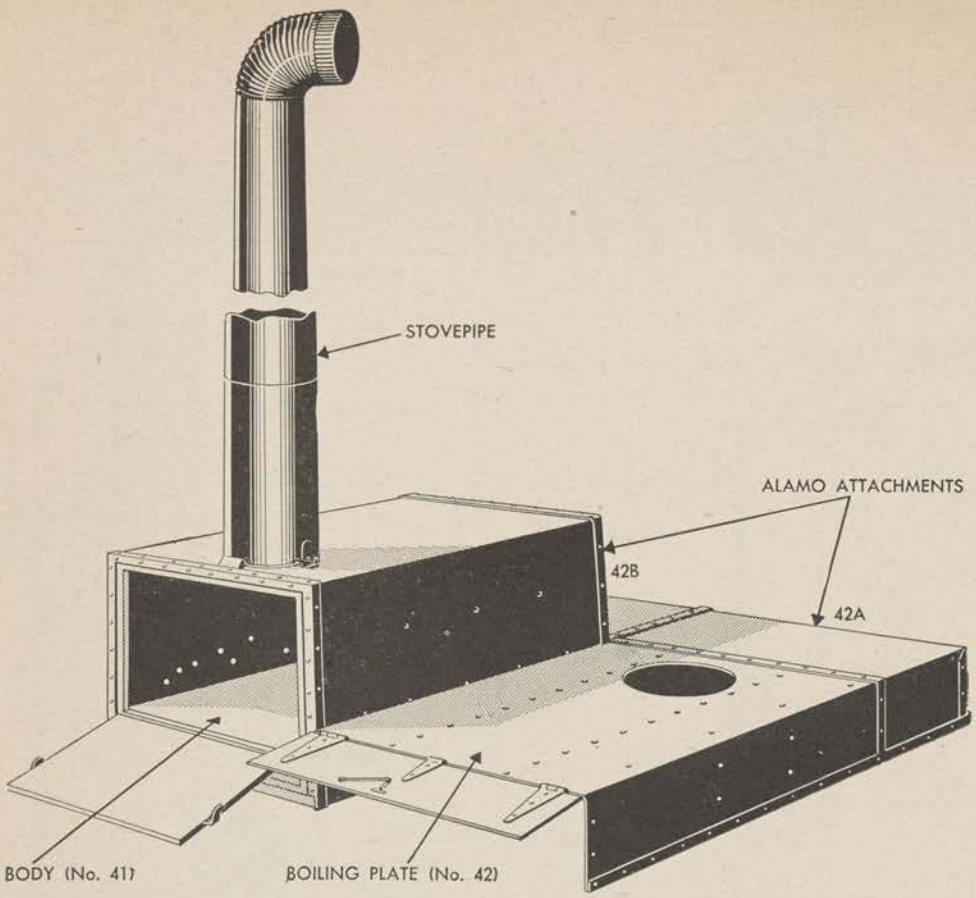

Figure 55. Range, Army field, No. 1 (65–B–1095) (complete with equipment, stock No. 65–B–1090).

not bank the oven as this would cause the sheet iron sides to warp and burn through. The earth should not extend above the reinforcing straps along the sides and under the oven door.

d. When the oven is to be used for 1 day only, remove enough earth from under the boiling plate to allow for building and maintaining the fire.

e. If the range is to be used for several days, dig a trench under the boiling plate, extending 1 foot under the Alamo attachments and 6 inches under the oven.

f. If the range is to remain in place for an extended period of time, do not dig a trench, but proceed as follows: (See fig. 58.)

(1) If sufficient bricks are available, lay an entire brick floor for the range. Flat stones or hard clay may be used in place of bricks.

(2) Set up the range on the brick floor or on the level ground and mark the complete outline of the range.

(3) Remove all parts of the range and build a wall, 3 bricks high and 8 inches wide, on the outline marks and on the line between the oven and the boiling plate. Leave a gap in the wall below the front edge of the boiling plate to permit building and maintaining the fire.

(4) Install the range on top of the brick wall.

(5) Place a number of bricks on edge, $\frac{3}{4}$ inch apart, under the oven. These hold the heat and improve baking.

(6) Bank the outside of the brick walls at the sides and at the rear of the range with clean earth.

42. Operation

a. GENERAL. (1) If large cans of water or other heavy weights are to be placed on the boiling plate, lay angle irons across the plate so that the weight will fall on the sides and not on the top.

(2) If the fire is not hot enough for efficient baking, remove the tin inside the baking chamber.

(3) If the ground under the oven becomes hot and dried out, raise the bakepans about 2 inches off the oven floor by placing angle irons under the bakepans. Do not use earth or sand for this purpose or the fire may burn through the bottom plate.

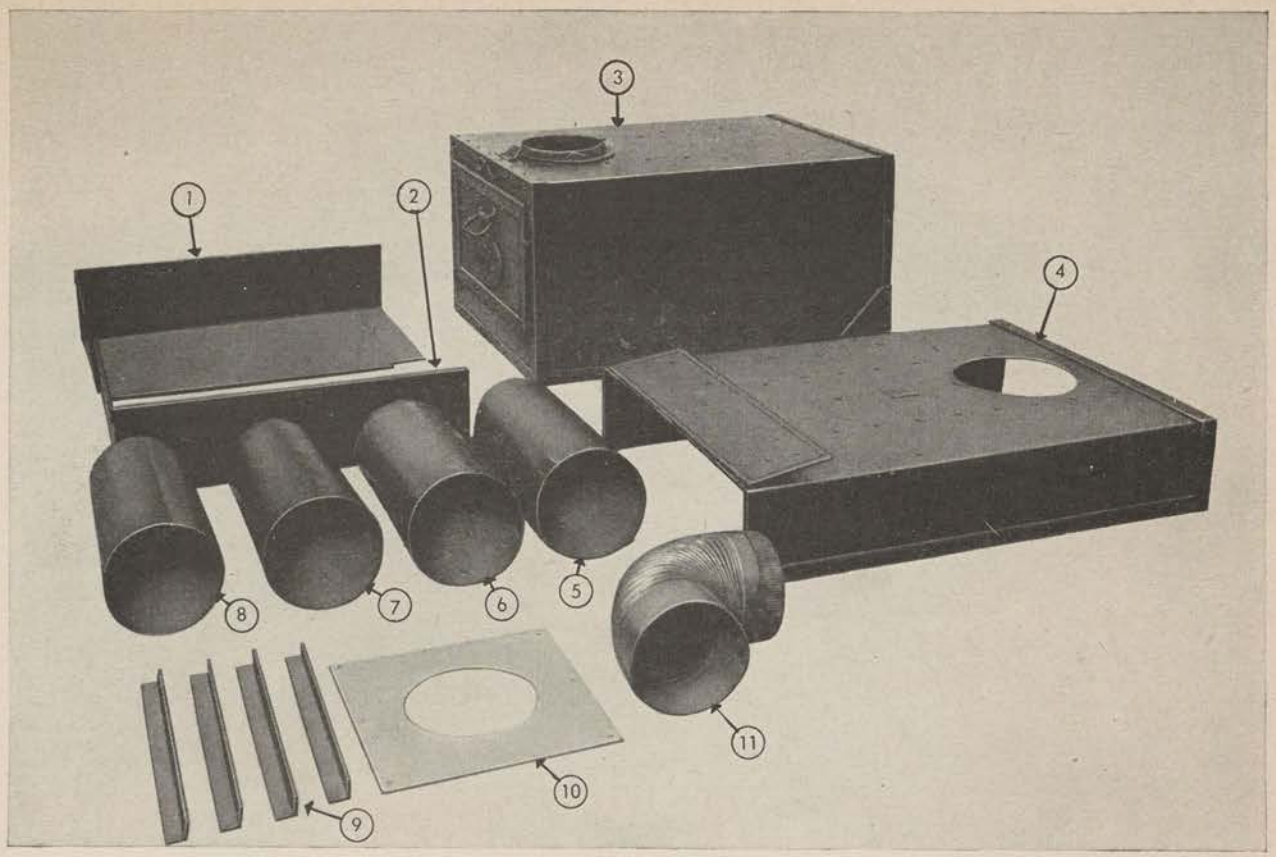

1.	65-B-1010	*Attachment, Alamo: part No. 42-A.*
2.	65-B-1015	*Attachment, Alamo: part No. 42-B.*
3.	65-B-1025	*Body: part No. 41.*
4.	65-B-1070	*Plate, boiling: part No. 42.*
5.	65-B-1045	*Pipe, joint: part No. 43.*
6.	65-B-1050	*Pipe, joint: part No. 44.*
7.	65-B-1055	*Pipe, joint: part No. 45.*
8.	65-B-1060	*Pipe, joint: part No. 46.*
9.	65-B-1115	*Rests, pan: part No. 57.*
10.	65-B-1035	*Guard, tent.*
11.	65-B-1040	*Pipe, elbow: part No. 47.*

Figure 56. Component parts of range, Army field, No. 1.

(4) Cooking operations such as boiling, frying, braising, and stewing are done over the boiling plate. Use Alamo No. 42A for simmering and Alamo No. 42B for keeping foods hot. Baking and roasting are done in the oven, and the top of the oven is used for keeping foods warm.

(5) When moving the range from one location to another, if possible carry enough dry wood to cook the first meal at the new location.

b. USING WOOD OR COAL. (1) Use short, dry wood for firing and keep the fire well toward the firing end (front end) of the boiling plate. Do not overload the range with wood, but keep an even-burning fire.

(2) Never use coal when wood is obtainable. Even when coal is used, add some wood if possible. Continued use of coal alone will soon burn the range out.

c. USING OIL-AND-WATER BURNER (DODSON BURNER. (See figs. 59 and 60). (1) In the event that a supply of oil is available, an oil-and-water burner may be improvised. (See fig. 59.) Crankcase oil or other waste oil may be utilized.

Caution: Since this improvised oil-and-water burner produces smoke, it should never be used when it is necessary to conceal the position of the range.

(2) The following materials are necessary for an oil-and-water burner:

Two small metal drums.
About 15 feet of metal tubing.
Two valves.
A metal plate 8 or 10 inches in diameter.

(3) To construct the burner, proceed as follows:

(*a*) Fill one drum with water and one with oil. Place them near the firing end of the boiling plate, one at each side, raised approximately 1 foot from the ground.

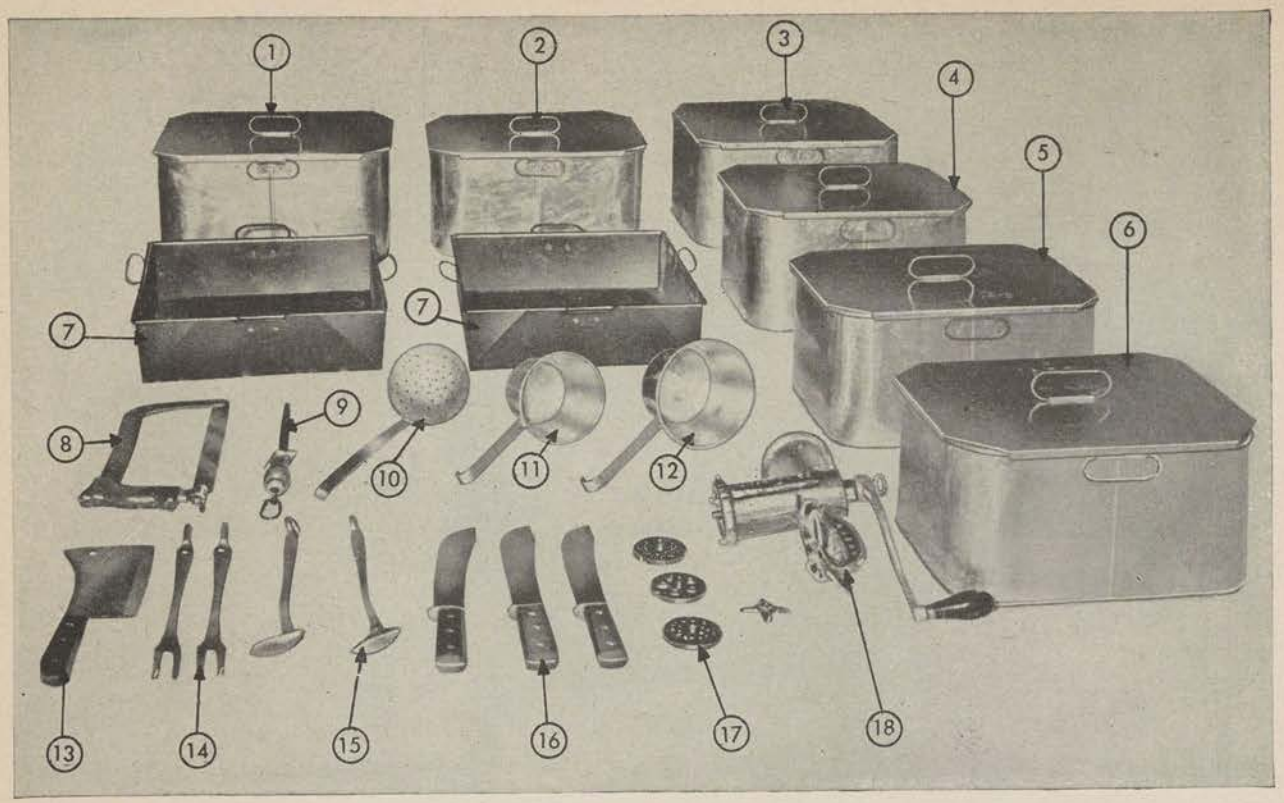

1.	64-B-1065	Boiler, range, Army field, with cover: part No. 48.
2.	64-B-1066	Boiler, range, Army field, with cover: part No. 49.
3.	64-B-1067	Boiler: range, Army field, with cover: part No. 50.
4.	64-B-1068	Boiler, range, Army field, with cover: part No. 51.
5.	64-B-1069	Boiler, range, Army field, with cover: part No. 53.
6.	64-B-1070	Boiler, range, Army field, with cover: part No. 54.
7.	64-P-386	Pans, bake and roasting 4½" x 15½" x 17½": part No. 52, bottom.
8.	64-S-115	Saw, butchers' 14" blade.
9.	64-S-1220	Steel, butcher, length 10".
10.	64-S-790	Skimmer, 15" overall.
11.	64-D-200	Dipper, 1-quart.
12.	64-D-210	Dipper, 2-quart.
13.	64-C-725	Cleaver, butchers', 8" blade.
14.	64-F-275	Forks, cook, flesh, 15".
15.	64-S-1000	Spoons, basting, length 15".
16.	64-K-545	Knives, butcher, 10" blade.
17.	64-B-379	Blades, meat and food chopper, hand-operated.
18.	64-M-115	Machine, hand-operated, chopper (or grinder) w/o fly wheel, meat and food, small.

Figure 57. Utensils for range, Army field, No. 1.

(*b*) Attach a piece of tubing fitted with a valve to the lower part of each drum. Bend the tubes as illustrated in figure 59 and extend them under the range to the point at which you want the flame.

(*c*) Place the metal plate a foot or more under the boiling plate (No. 42), so that oil and water may drip from the tubing onto the plate.

(4) To light the burner, place a piece of rag or paper, saturated with oil, on the metal plate and ignite. Open the valves so that oil and water drip slowly onto the plate. The burner will work best when the proportion of oil and water is: oil, 60 percent; water, 40 percent.

(5) To shut off the burner, close both valves.

(6) This burner may also be used with Army field range No. 2 (see sec. III, ch. 3) and with Army field bake oven No. 1 (see par. 61).

43. Care and Maintenance

a. Only the cooking vessels furnished with the range are to be used. Larger and heavier vessels may cause the tops of the stove components to warp or buckle.

b. The angle irons furnished with the range serve the following purposes:

(1) As rests for boilers and pans on the boiling plate, Alamos, and oven top. Thus employed they tend to prevent warping and buckling.

(2) As rests for baking and roasting pans in the oven, thus reducing bottom heat.

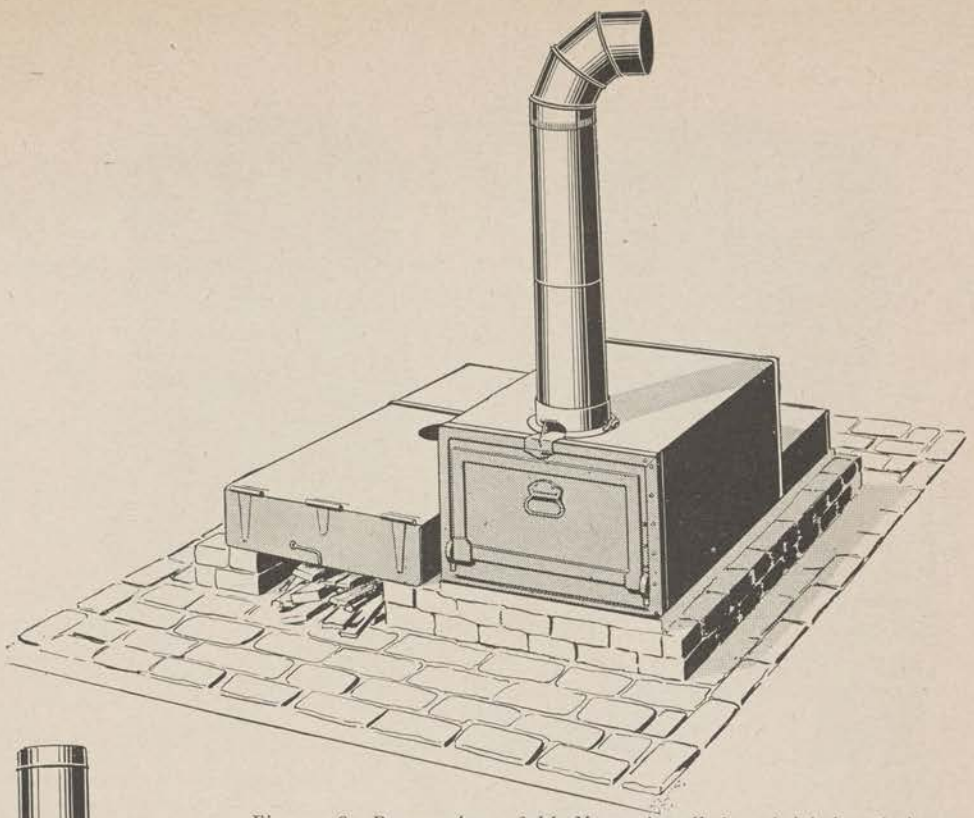

Figure 58. Range, Army field, No. 1, installed on brick foundation.

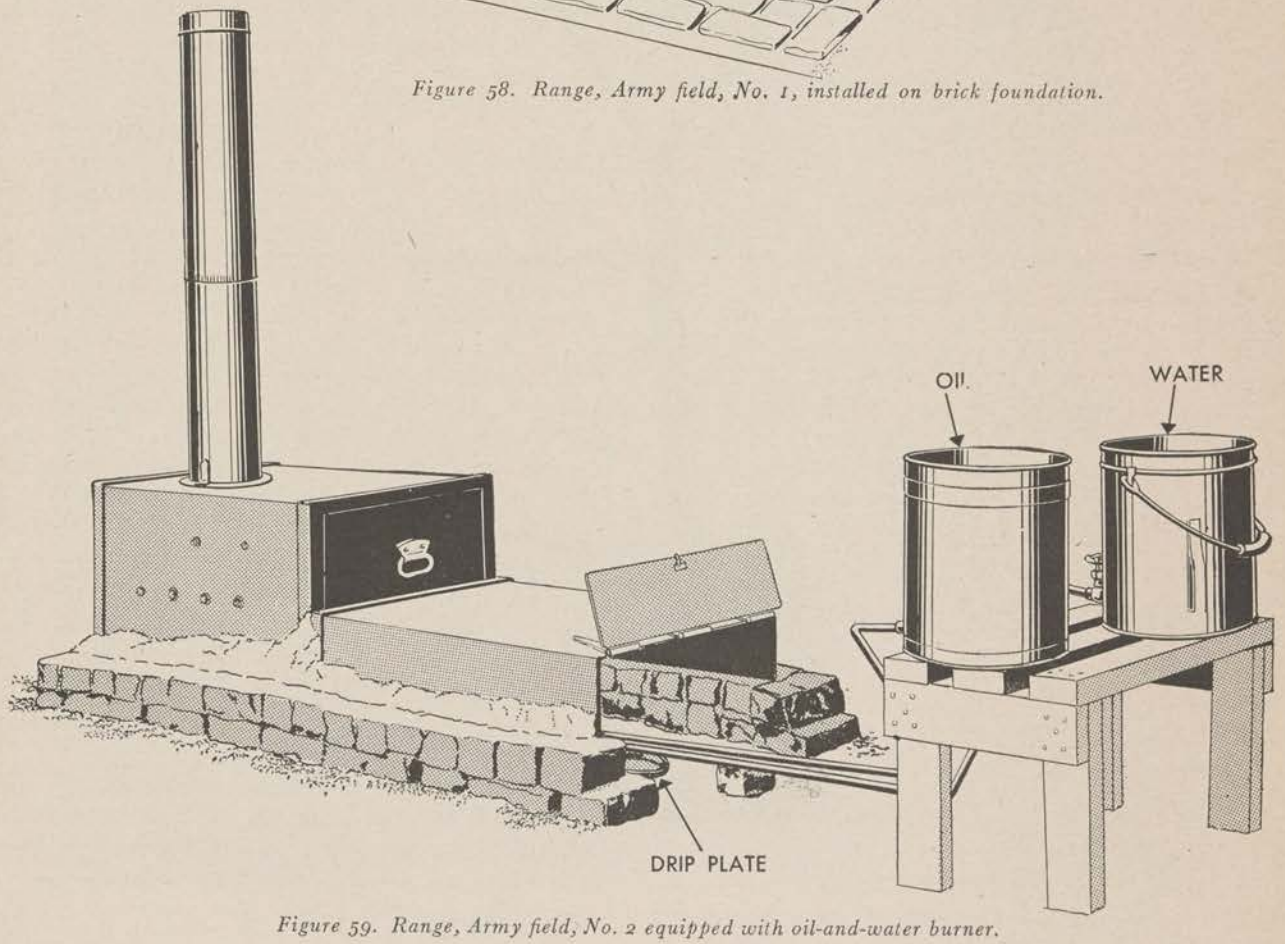

Figure 59. Range, Army field, No. 2 equipped with oil-and-water burner.

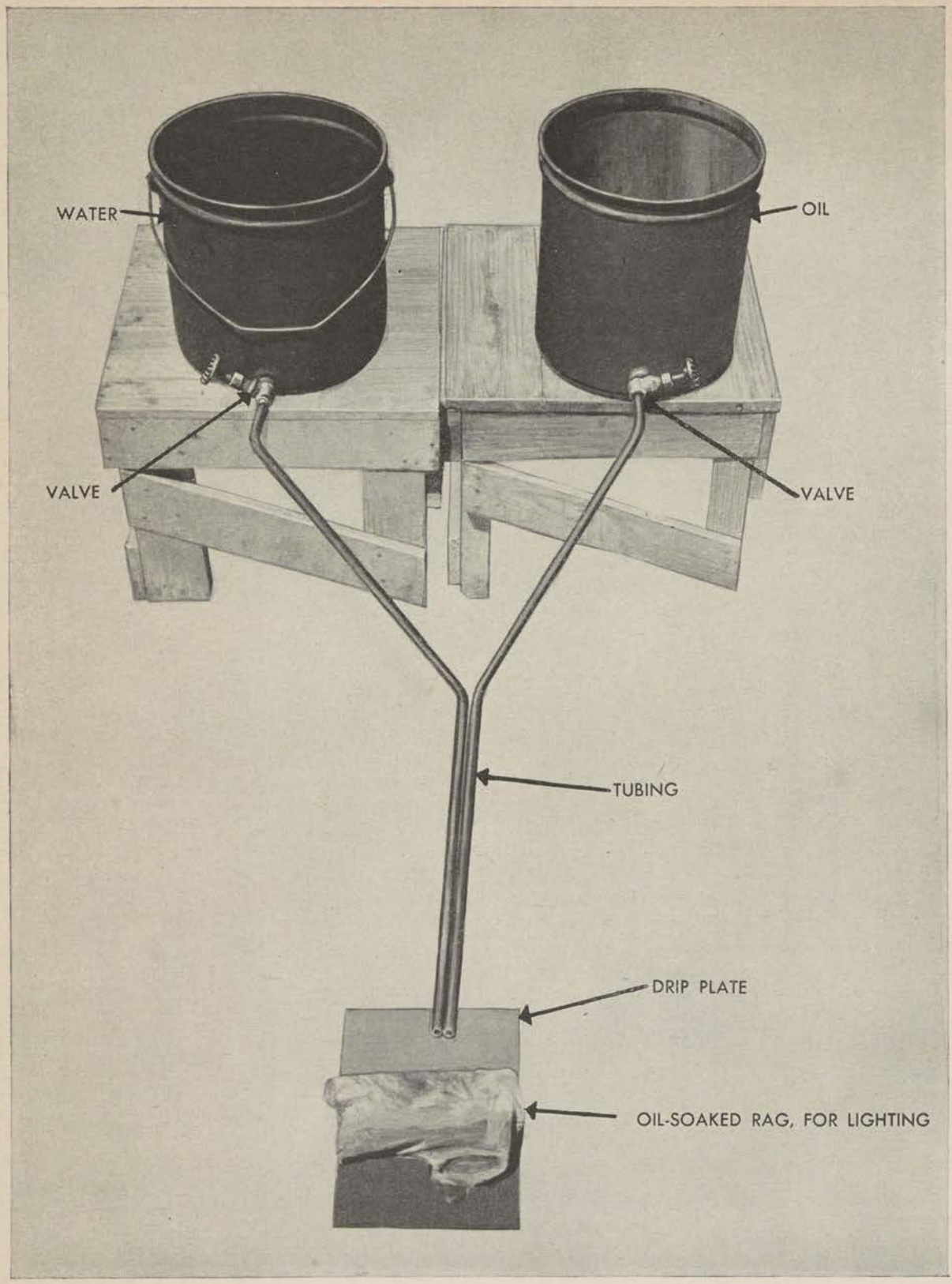

Figure 60. Detail of oil-and-water burner.

(3) As rests to protect the bottom of cooking vessels when placed on the ground.

c. Clean the stovepipe and the draft spaces above and at the sides of the oven at least once a week.

(1) To loosen the soot, insert a flexible wire or scraper through the stovepipe opening of the oven.

(2) Turn the oven on its side and loosen the soot on the oven sides by scraping the draft spaces with a piece of wood or wire.

(3) Remove the soot by setting the oven upright and slapping it with the hand or with the flat side of a piece of wood. Be careful not to injure the range by hitting or jabbing it with a sharp or heavy piece of wood.

d. To clean the range and prevent rust, scrape the surface of the range at least once a week and polish with stove polish or with a lightly greased rag.

e. Whenever the range is to be transported or stored for any considerable length of time, clean it thoroughly and coat it with vaseline, lard, cosmoline, or some other rust preventive.

44. How to Assemble for Transportation

a. When breaking camp and assembling range No. 1 for transportation, draw boiling plate No. 42 forward. Unfasten the bar lock, pull apart and remove Nos. 42A and 42B.

b. To pack the utensils and range No. 1 for transportation:

(1) Place the bakepan, part No. 52, on the ground. Set the boiler, part No. 50, inside of baking pan No. 52 and boiler No. 51 inside of boiler No. 50. Place tent guards inside of boiler No. 51 on bottom.

(2) Telescope the four joints of pipe. Inside of the pipe place two forks, three knives, one steel, one cleaver, and two folding lanterns. Place joints of pipe containing utensils inside of boiler No. 51.

(3) Place meat chopper in boiler No. 51 alongside of joints of pipe. Place two basting spoons, one meat saw, and one skimmer in boiler No. 51, on top of pipe. Cover with the smaller lid, No. 51, and then with the larger lid, No. 50.

(4) Place bakepan No. 52 upside down over the entire assembly. Care should be taken that bakepan handles are well down to the sides of the pan.

(5) Place stovepipe elbow in No. 54. Place dippers alongside of elbow.

(6) Place cover Nos. 54, 53, 49, and 48 on boilers in order named.

(7) Place nested boiler Nos. 48, 49, 53, and 54 in rear end of oven. Place bakepan and nested boiler Nos. 50, 51 in front end of oven. Close the oven door and lock with damper lock.

(8) Place Alamo attachment No 42A on left front corner of oven (No. 41) and Alamo attachment, No. 42B, on right front corner, inserting bar in crimp. This bar now rests against the pipe collar and prevents sliding.

(9) Place boiling plate (No. 42) on top of range, eye fitting over stovepipe flange and engaging under the flat hook. Make secure by fastening hook on front of boiling plate to the lug on back of range. The range is now secure for transportation.

45. Installation for Use on Troop Trains

a. GENERAL. When properly installed, Army field range No. 1 may be used for cooking in baggage cars or freight cars. (See fig. 61.) As many as three or four ranges may be installed in one car. The following equipment, in addition to that supplied with each range, is necessary: two galvanized iron water cans, two galvanized iron buckets, one stovepipe elbow, and 100 feet of wire. A fire extinguisher and a sand bucket must also be carried in each car in which a range is used.

b. TO INSTALL A RANGE IN A BAGGAGE CAR. (1) Construct a wooden box about 7 feet long by 3 feet 4 inches wide and 12 inches deep (inside measurements), with a bottom, using $1\frac{1}{2}$- or 2-inch material.

(2) Line the sides, ends, bottom, and the top edge of the box with galvanized iron or zinc.

(3) Place the box in the car on 2- by 4-inch boards running lengthwise on one side of the floor of the car about 2 feet from the side, leaving an air space of about 4 inches between the floor of the car and the bottom of the box. Nail 2- by 4-inch guards around the box as necessary to provide additional protection.

(4) Fill the box with dirt or sand to within about 2 inches of the top.

(5) Place a brick flush with top of the dirt at each of the four corners where the range will sit.

(6) Place the oven in the box, with the front close up against the end of the box, and deep enough so that when the oven door is opened, it will lie flat on the edge of the box.

(7) Place the boiling plate on the box behind the oven with the end resting on top of the angle iron at the rear of the oven. The Alamo attachments are not used when the No. 1 range is installed in a baggage car or freight car.

(8) Fasten the oven and the boiling plate to the box with several metal bands, or with strands of telephone or telegraph wire.

(9) Fill the space between the range and the sides of the box with soft mud to hold in the heat.

(10) Remove one of the ventilating windows from the baggage car and tack the tent guards over the opening, one on the outside and one on the inside. Attach the stovepipe to the range and extend it about 6 inches through the opening. Place the elbow on the end of the pipe, facing toward the rear of the train, and wire it firmly to the car. Also wire the stovepipe to both sides of the car. If the range is set up in a freight car, cut a hole in the top of the car for the stovepipe, and use the tent guards as in a baggage car.

(11) If possible, fill the water cans at every stop.

(12) When the train is backing up while the range is in use, pull out the damper above the oven door to prevent sparks and smoke from coming out the firing end of the range. If possible, reverse the outside elbow at the end of the stovepipe.

(13) The commanding officer of troops on a train in which an Army field range No. 1 has been installed will issue necessary orders to insure that watchful attention is given to the range at all times.

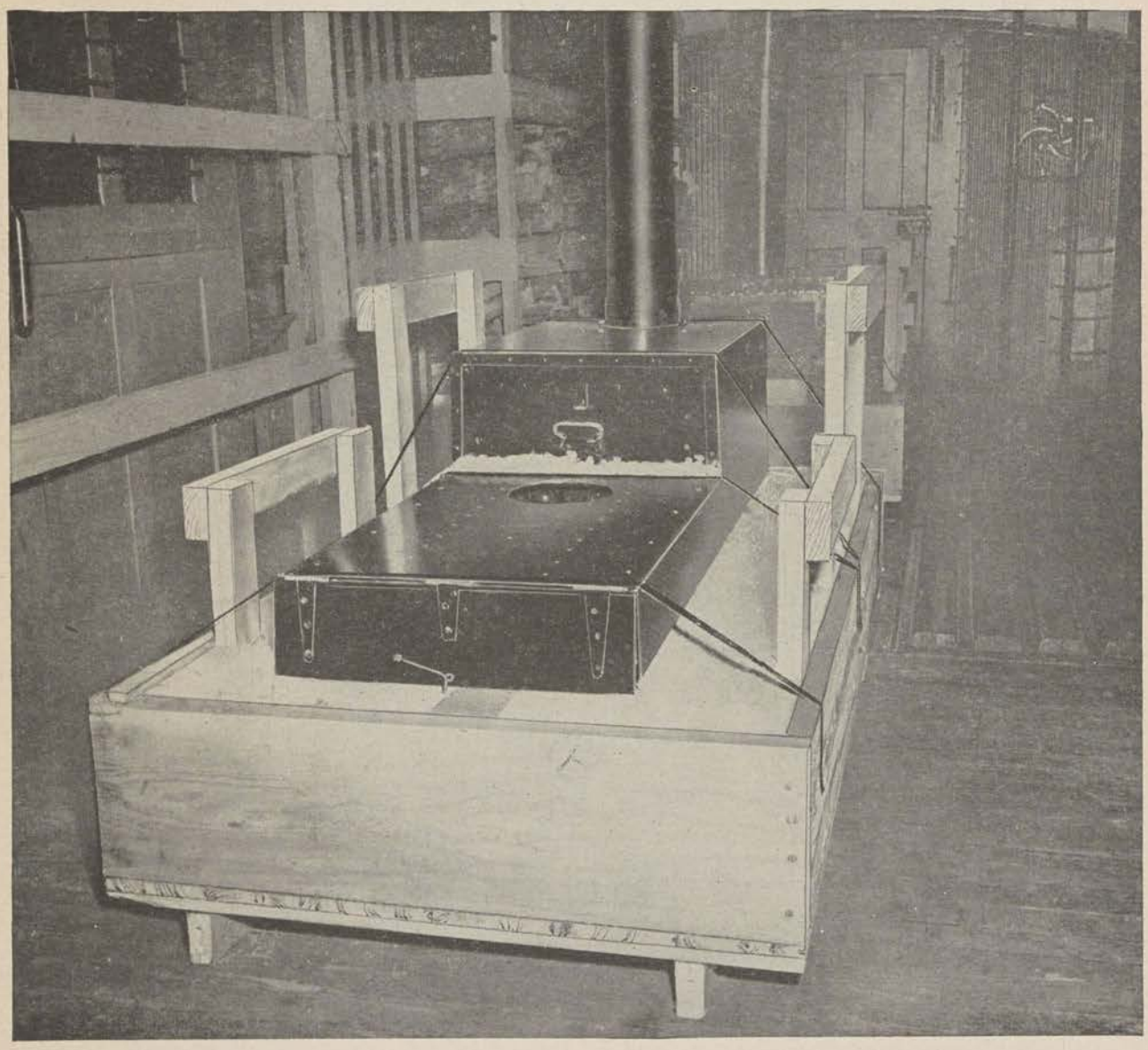

Figure 61. Range, Army field, No. 1, installed in railway kitchen car.

Section III. RANGE, ARMY FIELD, NO. 2

46. Description

a. Army field range No. 2 (stock No. 65–C–1070) is a wood-burning range, designed to cook for approximately 55 men; it consists of an oven (No. 61) and a boiling plate (No. 62). (See fig. 62.) The Alamo attachments used with field range No. 1 are not used with field range No. 2.

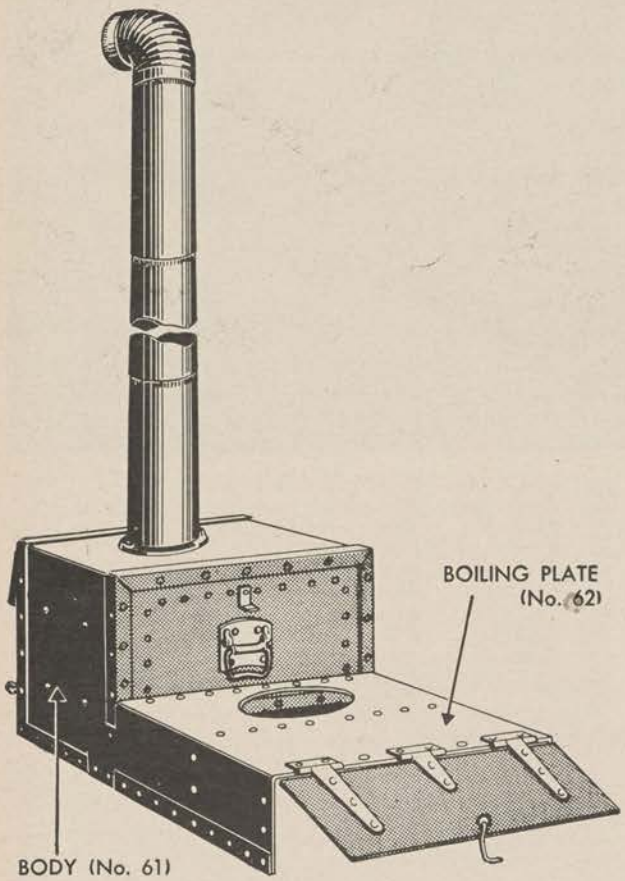

Figure 62. Range, Army field, No. 2 (65–C–1070) (complete with equipment, stock No. 65–C–1065).

b. Cooking vessels for the range include two boilers, with covers, and two bakepans. Other necessary utensils are also provided. A list of components and utensils is given in section VIII, appendix. (See fig. 63.)

47. Installation

a. To set up the range, attach the boiling plate at the rear of the oven. Slip the projecting collar into the space cut from the rear of the oven for that purpose.

b. If the range is to remain in place for several days, dig a trench about 16 inches wide, 6 inches deep, and 5 feet long under the boiling plate. The trench should also extend about 3 inches under the oven. Keep the fire toward the front of the boiling plate or the oven will become too hot for baking and the bottom will soon burn out.

c. See instructions contained in paragraph 41*c*, *d*, and *f*.

48. Operation

With the exception of those parts of paragraph 42 which deal with the Alamo attachments, the operating instructions contained therein are applicable to the operation of Army field range No. 2.

49. Care and Maintenance

The instructions contained in paragraph 43 are applicable to the care and maintenance of Army field range No. 2.

50. How to Assemble for Transportation

a. To pack utensils and range No. 2 for transportation, place bakepan, part No. 52, on the ground. Set boiler, part No. 50, inside of bakepan No. 52 and boiler No. 51 inside of boiler No. 50. Place tent guards on bottom of boiler No. 51.

b. Telescope the four joints of stovepipe. Inside of pipe place two forks, two knives, one sharpening steel, two spoons, pan rests, one lantern (folding), and one skimmer. Place dipper and elbow alongside the pipe.

c. Place meat saw in bakepan No. 52 alongside of boilers.

d. Cover boilers with lids Nos. 51 and 50. Place bakepan No. 52 upside down over lid No. 50.

e. Place pans in range oven. Place the boiling plate at the door end of the oven.

f. Engage the flanges on the inner side of boiling plate with the lugs on the door end of the oven. Fasten the hook on boiling plate (firing end) to lug above the handle on the closed end of oven. The range is now secure for transportation.

51. Installation for Use on Troop Trains

The instructions contained in paragraph 45 are applicable to the installation of Army field range No. 2 for use on troop trains.

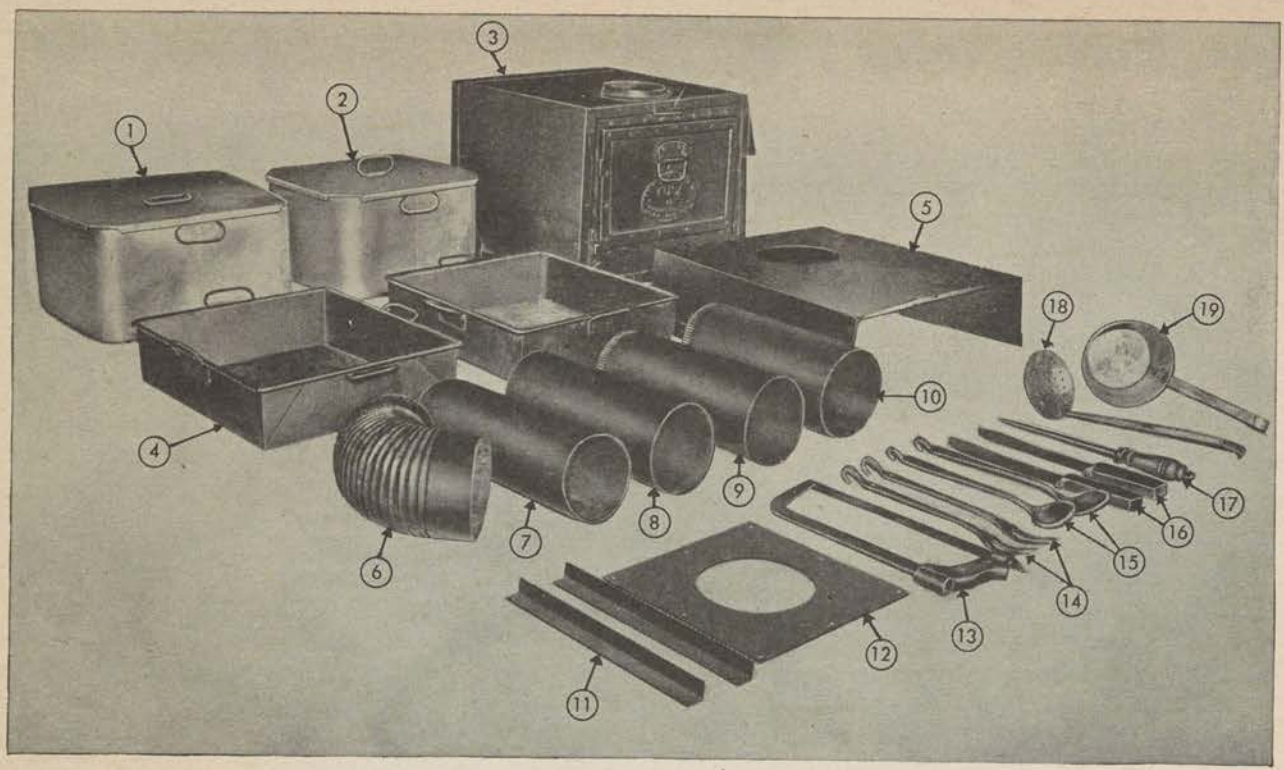

1.	64-B-1067	Boiler, range, Army field, with cover: part No. 50.
2.	64-B-1068	Boiler, range, Army field, with cover: part No. 51.
3.	65-C-1010	Body: part No. 61.
4.	64-P-386	Pans, bake and roasting, 4½" x 15½" x 17½": part No. 52, bottom.
5.	65-C-1050	Plate, boiling: part No. 62.
6.	65-C-1015	Pipe, elbow: part No. 67.
7.	65-C-1020	Pipe, joint: part No. 63.
8.	65-C-1025	Pipe, joint; part No. 64.
9.	65-C-1030	Pipe, joint: part No. 65.
10.	65-C-1035	Pipe, joint: part No. 66.
11.	65-B-1115	Rests, pan: part No. 57.
12.	65-B-1035	Guard, tent.
13.	64-S-115	Saw, butchers', 14" blade.
14.	64-F-275	Forks, cook, flesh, 15".
15.	64-S-958	Spoons, basting, length 13½".
16.	64-K-545	Knives, butcher, 10" blade.
17.	64-S-1220	Steel, butcher, size 10".
18.	64-S-790	Skimmer, 15" overall.
19.		Dipper, 2-quart.

Figure 63. Components and utensils, range, Army field, No. 2.

CHAPTER 4

OVENS

Section I. OVEN, BAKE, FIELD, M1942

52. Description

a. The field bake oven M1942 (stock No. 65–A–5500), (fig. 64), is a large two-deck oven which will produce 48 pounds of round field bread or 60 pounds of garrison field bread in a baking period of 1 to 1½ hours. Baking time depends on the type of bread being baked, the type of burner used, and local climatic conditions. One section of a bakery company operating two ovens will produce bread for approximately 2,500 men each day. (For a list of component parts and accessories of the outfit, baking, field, M1942, see sec. IX, app. For a list of parts for mechanical maintenance, see sec. X, app.)

b. The bottom section of the oven contains two burner chambers into which the fire units are placed, and three proofing chambers. The upper section contains two baking chambers, each of which will hold three standard ration pans.

c. The two sections of the oven are easily disconnected. Each one weighs approximately 550 pounds, is equipped with round bars for lifting, and may be conveniently handled by four men.

d. Because the baking temperature of all parts of the baking chambers is comparatively uniform, a minimum of pan shifting is required. In order to insure an even product, however, it is important to change the side pans in each chamber during the baking.

e. The heating unit of the field bake oven, M1942, may be either the unit, fire, M1937, or the outfit, burner, pot type, oven, bake, field M1942 which is replacing the fire unit as fast as production permits. Personnel who are to use the oven should be familiar with the operation and maintenance of both types of burners.

53. Assembling

a. Pull out the round lifting bars at each side of the lower section and place this part of the oven in a level position on the ground. Leave this lower section on its original skid, in order to prevent dust, sand, and dirt from entering the proofing chambers.

b. Pull out the lifting bars on the upper section and place this section on top of the lower section of the oven, making sure that all edges are flush.

c. Clamp and bolt the two sections together firmly.

d. Install the fire unit.

54. Firing with Unit, Fire, M1937 (see fig. 64)

a. For general directions in regard to use, maintenance, and cleaning of the M1937 fire unit, see paragraph 36. In ordinary circumstances the conversion sets described in paragraph 37 will not be used in the M1942 bake oven.

b. Heat the oven to a temperature of 450° F. before charging it. During the process of charging, the temperature will drop to 350° or 360° F. The baking should be carried on at a temperature of 360° F.

c. Five minutes before the bread is removed from the oven, increase the temperature to 450° F. in preparation for the next charge.

d. In hot weather or at any time when excess pressure in the fire units is a serious problem, be sure that the damper in the top of the back stack of the oven is open. This stack has no connection with the front stack, the oven flues, or the baking chambers, and manipulations of the damper in this stack will not influence the baking properties of the oven.

e. Do not allow the air pressure to go above 40 pounds. When the pressure reaches this point, open the air valve. If the pressure does not fall, remove the burner oven plate and pull the burner partially out of the compartment. If the pressure continues to increase, substitute another fire unit.

f. Change the filter disk and clean the generator each time the fire unit is refueled.

g. If only the top section of the oven is available, the M1937 fire units may still be used. (See fig. 65.)

(1) Dig a trench 30 inches deep, 4 feet wide, and 6 feet long.

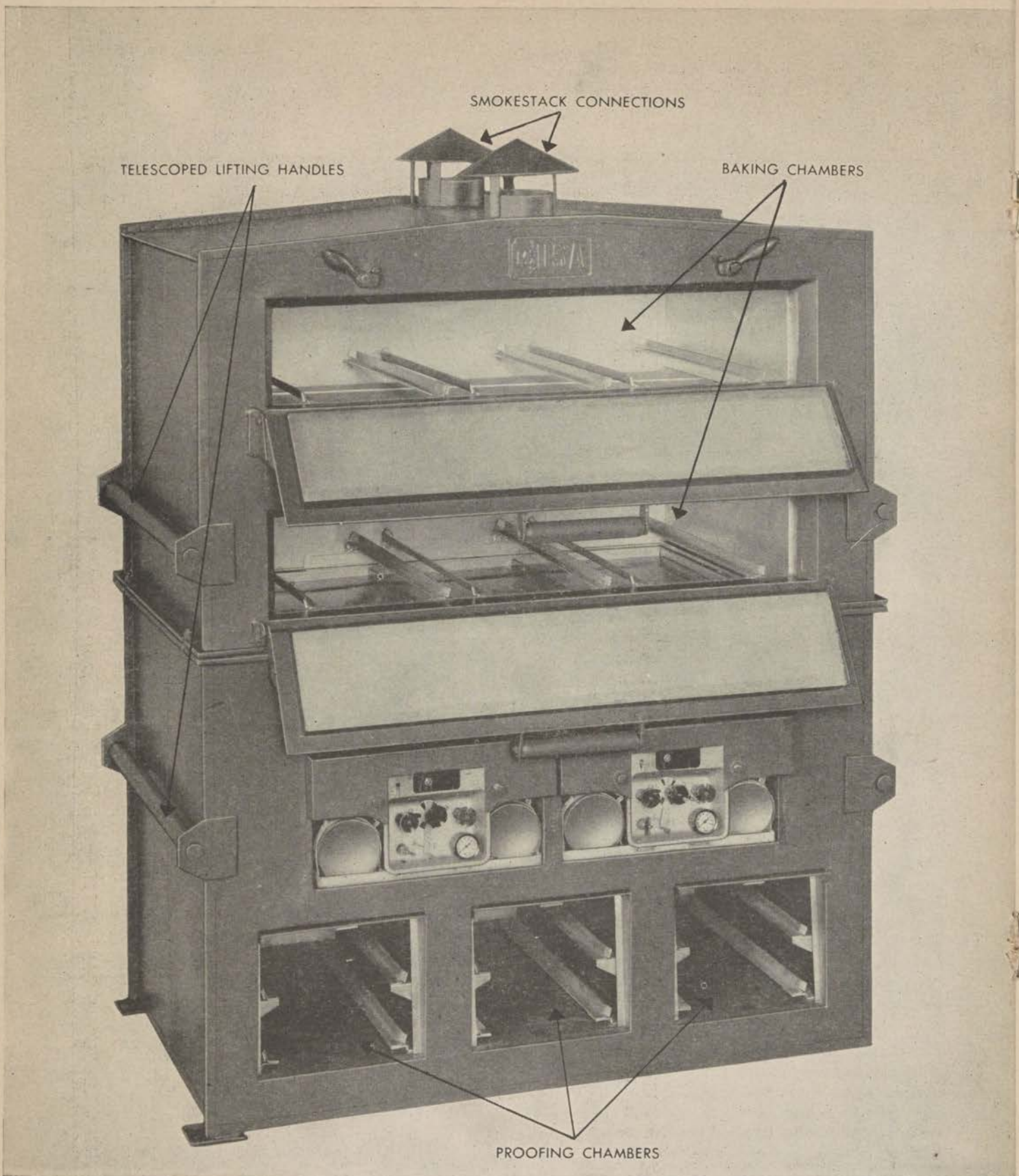

Figure 64. Oven, bake, field, M1942 (65–A–5500), equipped with units, fire, M1937 (65–J–2605).

(2) Into one side wall of the trench dig two holes, each large enough to accommodate an M-1937 fire unit. Dig the holes side by side, 8 inches apart, with the top of each hole 12 inches below ground level.

(3) Measure off the distance between the flue openings on the bottom of the top section of the oven.

(4) Dig a flue to each hole which will connect the holes with the flues of the oven when the top section is in position.

(5) Place a fire unit in each hole and place the top section of the oven into position. Fill in the spaces around the front of each fire unit with small stones. Improvise a proofing chamber and proceed with the baking. A bread rack, covered with canvas and placed near the oven, makes a satisfactory proofing chamber. To provide steam for proofing,

Item No.	Stock No.	Components	Quantity
1	65–H–1002	Adapter, gravity feed, 5-gallon gasoline can	2
2	65–A–4895	Box, tools and spare parts (empty), outfit, burner, pot type, oven, bake field, M1942	1
3	65–A–4910	Burner, pot type, oven, bake, field, M1942 (with float valve, instruction plate and 2 clamp blocks) (this includes also 1 can furnace cement for each burner)	2
4	65–A–4930	Cap, rear stack, connection	1
5	65–A–4940	Cradle, 5-gallon gasoline can	2
6	33–H–468	Hose, gasoline, screw type	2
7		List of Instructions (installation)	1
8	65–H–2283	Pipe, stove, joint-or-section, straight, 6″, nested	3
9	65–A–5800	Torch, lighter	1
10	65–A–5900	Wrenches, burner, pot type, oven, bake, field, M1942 (set)	1

Note. Two cans, gasoline, 5-gallons must be requisitioned separately.

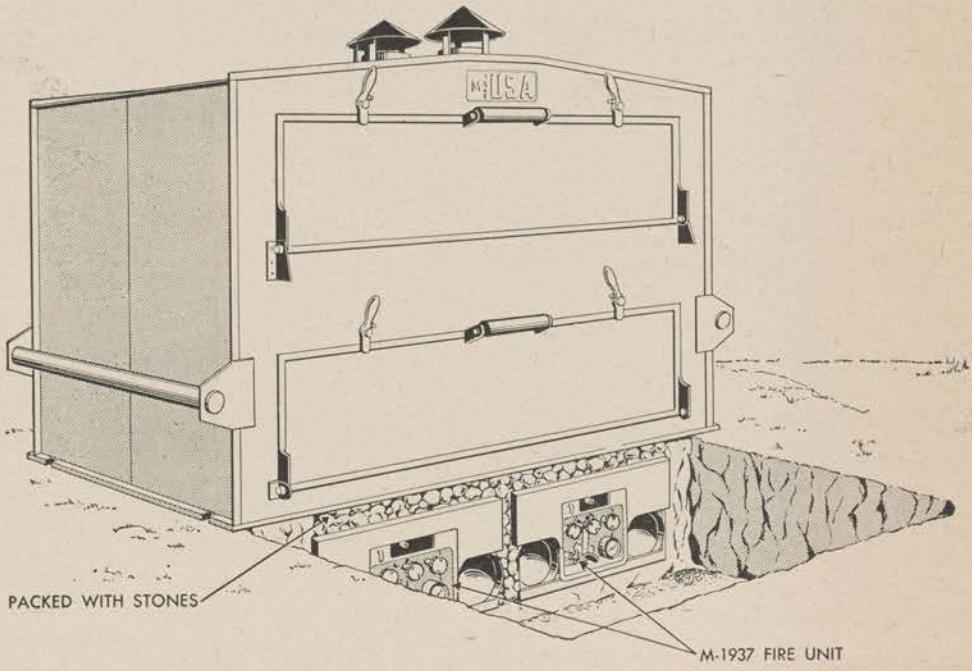

Figure 65. Top half of oven, bake, field, M1942, used with units, fire, M1937.

drop hot rocks into containers of water placed in or near the proofing chambers.

(6) These improvised burner chambers should be dug only in clay or in firm soil.

55. Firing with Outfit, Burner, Pot Type, Oven, Bake, Field, M1942 (see figs. 66, 67, and 68)

a. COMPONENTS. (1) The pot type burner is extremely simple in design and operation. Component parts of the outfit for one oven are as follows (see fig. 70):

(2) Contents of the box for tools and spare parts are as follows:

Stock No.	Items	Quantity
65–H–1002	Adapter, gravity feed, 5-gallon gasoline can	2
65–A–4885	Block, clamp, burner, pot type, oven, bake, field, M1942	4
17–G–1460	Gasket, spark plug 7/8″	4
33–H–468	Hose, gasoline, screw type	2
65–A–5600	Plug, asbestos, lighter	2
65–A–5875	Valve, float, burner, pot type, oven, bake, field, M1942	1
65–H–3715	Washer, adapter, gravity-feed, 5-gallon gasoline can	4

Note. Lists of maintenance parts are subject to periodic revision to conform to current field experience.

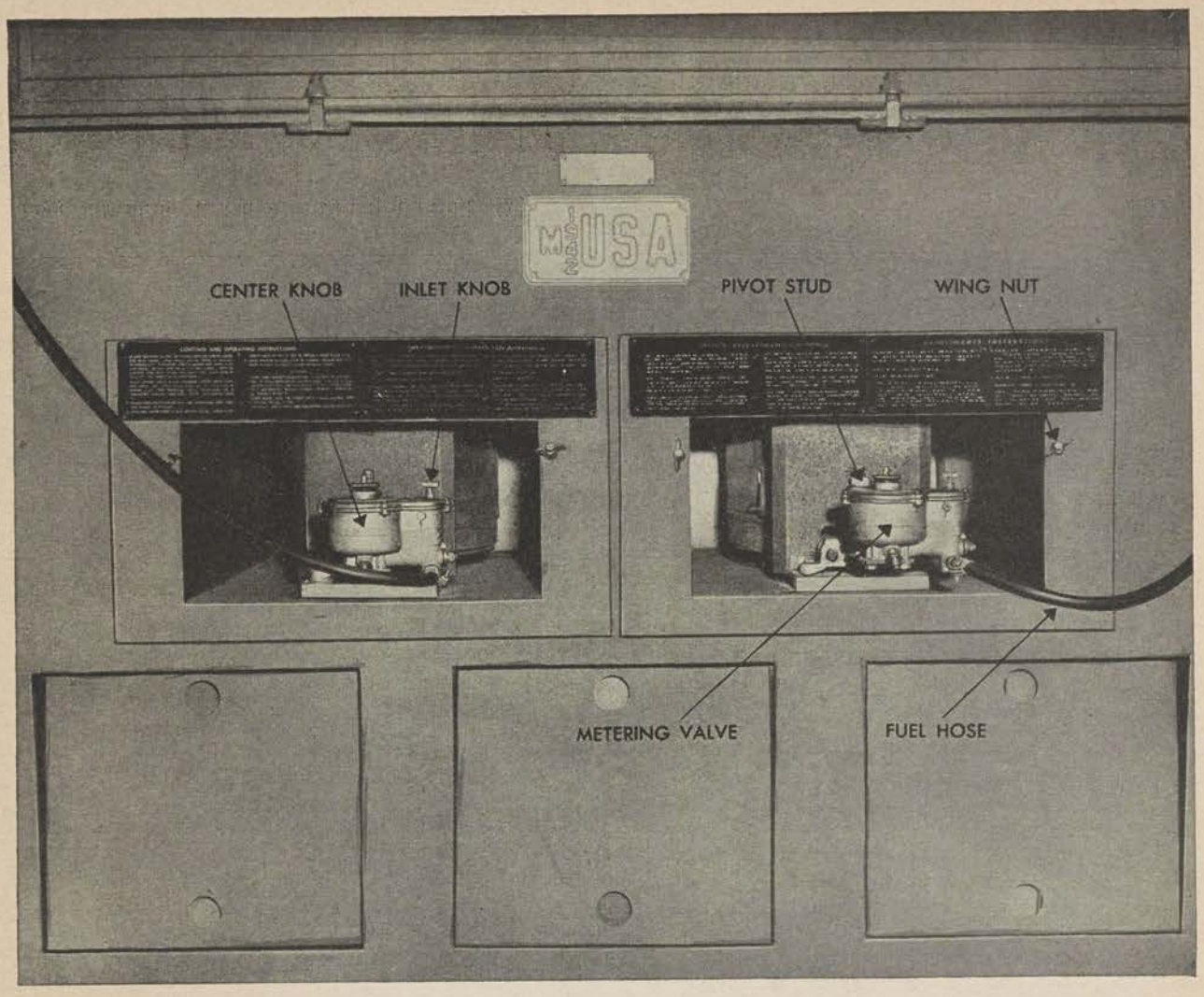

Figure 66. Burners, pot type (65–A–4910), installed in oven, bake, field, M1942.

(3) See section XI, appendix, for a list of parts for mechanical maintenance.

b. INSTALLATION (see figs. 69 and 70). (1) Attach the clamp blocks to the edges of the burner rails. (See fig. 69.) Place these blocks about one-half inch from the front, making sure that the edge of the pan enters the slot in the block full depth. Fasten each block with the two square head screws provided.

(2) Slide one burner unit into each burner compartment of the oven, so that the studs on the clamp blocks pass through the holes in the burner units. Clamp each burner unit with the two wing nuts. The joint around the front of the oven and the burner unit must be air tight, as any leak around this joint will interfere with combustion. It may be necessary to calk the crevices between the burner and the oven with mud or other available material.

(3) Place the cap over the rear stack connection and seal it firmly with furnace cement. (See figs. 64 and 70.) Any leak at this connection will interfere with combustion. (A few early model M1942 ovens are in use, which do not have the rear stack connection.)

(4) Join the three lengths of stack together and attach the assembly at the front connection. (See figs. 64 and 70.)

(5) Swing the float valve into operating position. The float valve on each burner is mounted on a pivot. During transportation of the oven the valve is swung into the housing and locked; for operation, the valve is swung out. To change the position of the valve, loosen the large nut on the

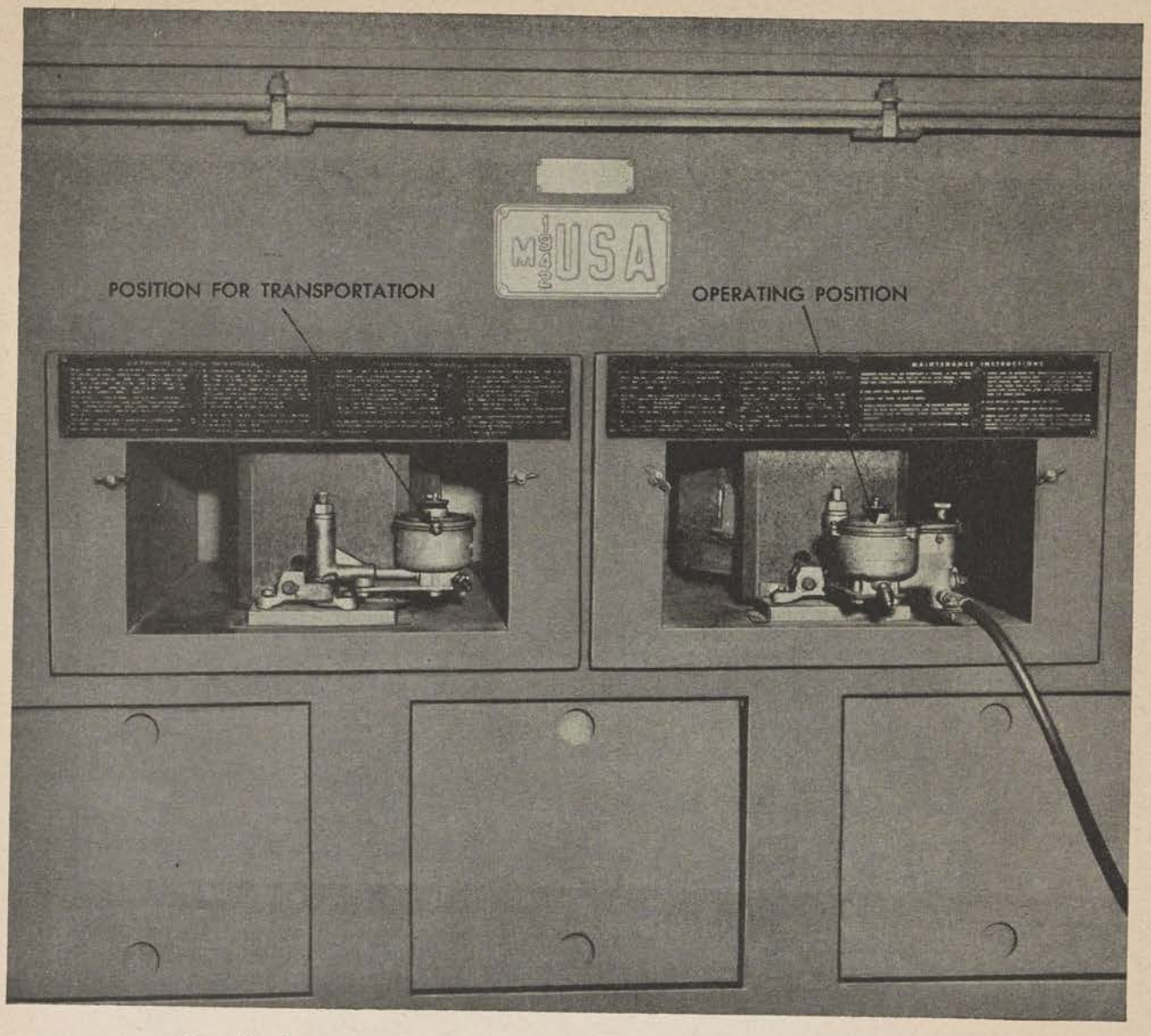

Figure 67. Burners, pot type (65–A–4910) (front view, showing action of valve swivel).

swivel stud which is provided with a cotter (split) pin. (See fig. 67.) Be sure to retighten the nut whenever the position of the valve is changed.

(6) Assemble the fuel can adapter into fuel can. The metal tube on the adapter is an air vent, made in two sections. (See fig. 70.)

(*a*) Screw the two sections together tightly.

(*b*) Remove the cap on the tank.

(*c*) Loosen the cam lock. Hold the cam lever in line with the hose and screw the outer ring down firmly so that the end of the tube is at the top corner when the container is set in the bracket. Tighten the cam lever by pressing it toward the can.

(*d*) Place the hanger brackets over the carrier bars on the top section of the oven. Make certain that the inlet knob on the metering float valve is "off" and then connect the hose to the inlet. Place the gasoline can in the bracket when you are ready to light the burner.

c. Operation. (1) To light the burner—

(*a*) Place the lighted torch into the burner pot through the lighting door.

(*b*) Open the valve to $6\frac{1}{2}$ on the dial; the fuel will ignite quickly.

(*c*) Load the bread into the oven when the temperature reaches 450° F.

(*d*) The temperature will fall while the oven is

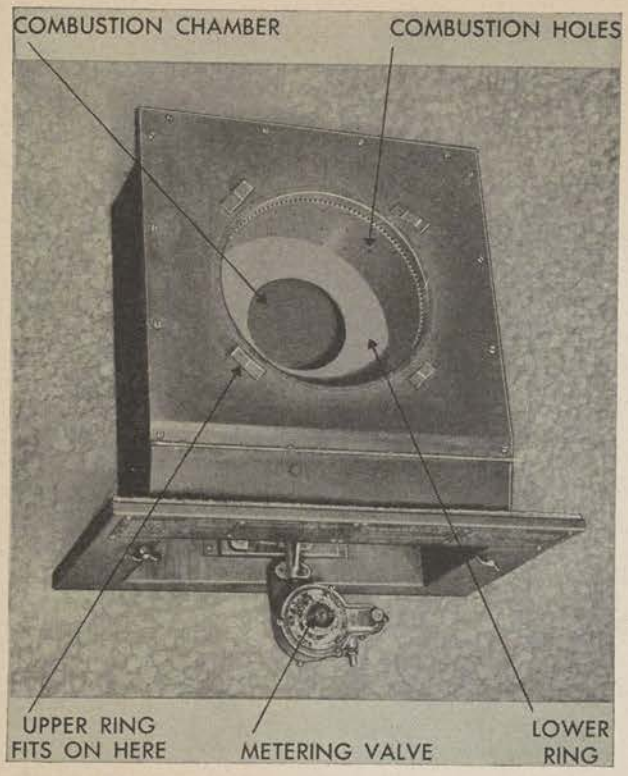

Figure 68. Burner, pot type (65–A–4910) (top view, showing combustion chamber and metering valve).

being charged. When the temperature climbs again to 360° F., turn the valve back to 3 on the dial.

(*e*) A few minutes before the bread is to be removed, turn the valve up to 6½ on the dial to heat the oven for the next charge.

(2) Use white or leaded gasoline, kerosene, or No. 1 or No. 2 fuel oil. Fuel consumption is about two-fifths of a gallon per hour.

(3) If the flame is accidentally extinguished, shut off the inlet knob immediately. If possible, allow the burner to cool before you attempt to relight it.

(4) The fuel control valve is adjusted to permit an excess flow for emergency use. Always set the center knob so that a clean, smokeless flame will be maintained, regardless of the type of fuel being used. To avoid frequent cleaning, do not overfire continually, as excess fuel will result in smoke and an accumulation of soot in the oven flues.

(5) Never allow the hose to touch a hot surface of the oven and avoid exposing it to the sun unnecessarily.

(6) To prevent accidental flooding, set the fuel can on the ground or the floor when the burner is not in use.

d. MAINTENANCE. (1) *Reference.* See section XI, appendix, for a list of parts for mechanical maintenance.

(2) *Cleaning.* The burners, the oven flues, and the stack must be kept clean if the burners are to produce their maximum heat.

(*a*) Keep the bottom of the burner pot reasonably clean and smooth, but do not scrape the metal. A thin layer of carbon protects the metal and makes lighting easy. If air holes are clogged,

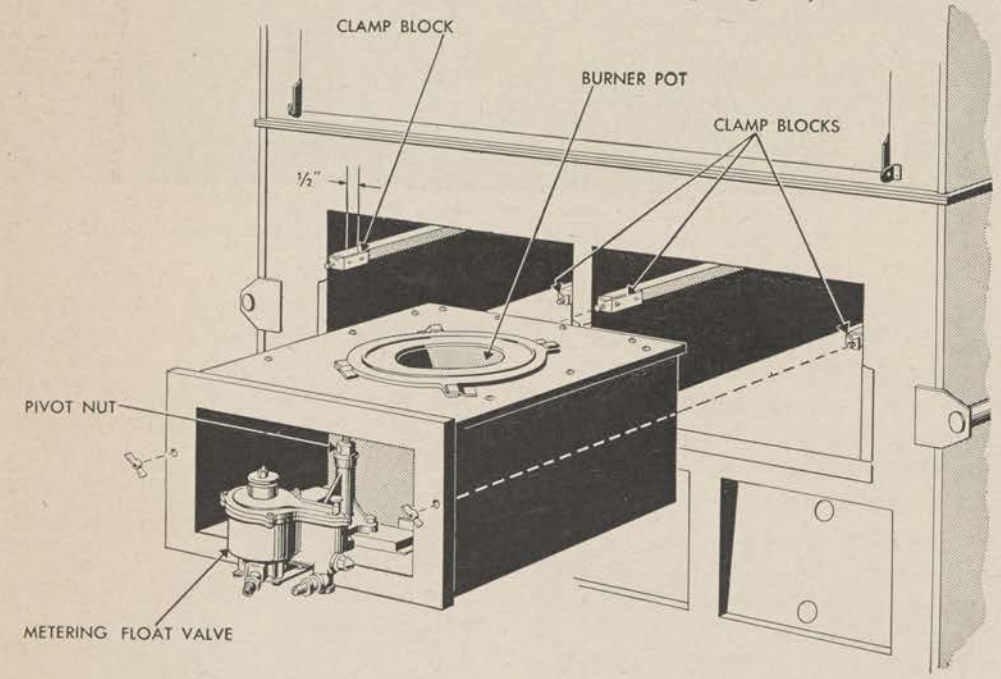

Figure 69. Method of installing burners, pot type (65–A–4910), in oven, bake, field, M1942.

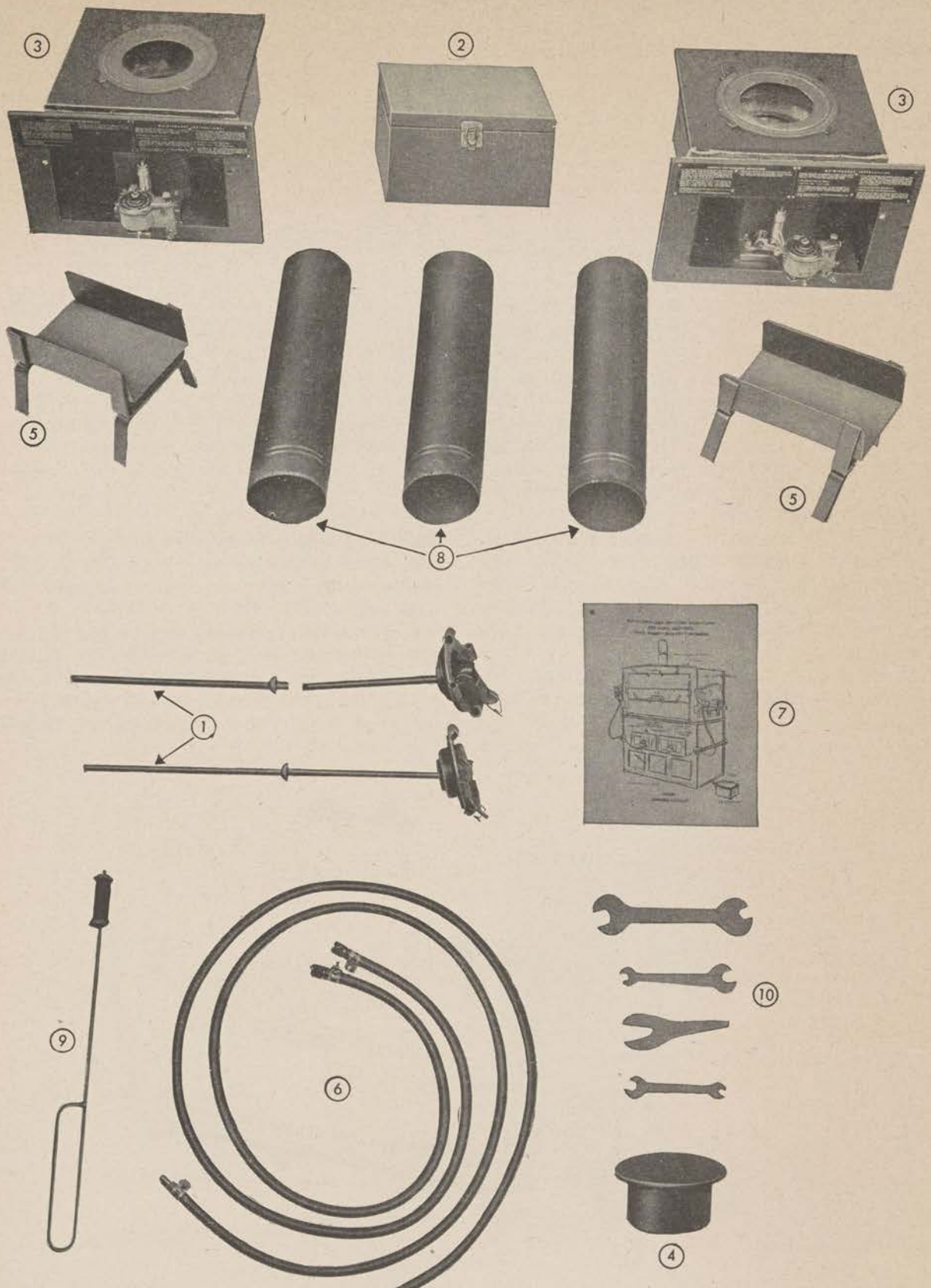

Figure 70. Parts for outfit, burner, pot type, oven, bake, field, M1942 (65–A–5040).

clean them with a match stick or peg or wood, not with metal.

(*b*) Brush or wipe off any scale or soot covering the air holes around the top of the burner.

(*c*) If dirty fuel is used, the strainer in the bottom of the metering valve must be removed and washed in gasoline or fuel oil. Remove the cotter pin and the large nut that clamps the pivot; then lift the valve off the stud and turn it upside down. Pull out the center knob to drain the bowl.

(3) *Other maintenance.* If a full flame cannot be secured, or if fuel does not feed into fuel pot:

(*a*) The fuel line from the valve to the burner may be clogged. To check this, remove the plug marked "clean out" in the pivot bracket. If the line is clogged, remove the winged nuts and slide the burner unit out of the oven. Using a wire, clean the fuel pipe. In addition, remove the top and the inner rings in the burner pot by turning them and lifting them out; dump and wipe out any accumulated soot or dirt.

(*b*) The strainer in the fuel valve may be dirty. If so, wash it in gasoline or fuel oil.

(*c*) The metering valve may contain water which has separated out of fuel. If so, drain the strainer and turn the metering valve upside down to drain the bowl.

(*d*) The control stem may be clogged. To correct this, pull up on the center knob to flush out wax or dirt.

(*e*) The fuel oil may be too cold and stiff to flow. Turn the center knob to 9 and lift the fuel can until the fuel flows.

(*f*) The fuel hose may be "air locked." If so, shut off the burner and bleed air at the inlet hose union on the valve.

e. PACKING OUTFIT FOR TRANSPORTATION. (1) Disconnect the hose at the valve, using two wrenches, so that the union separates, one part of the fitting remaining in the valve. Loosen the nut on the pivot stud and swing the valve into the burner (see fig. 67); then retighten the pivot stud nut so that the valve cannot swing out accidentally.

(2) Unscrew the hose from the fuel can adapter. Coil the hose, screw the ends together, and place it in the spare parts box.

(3) Release the cam lock and unscrew the fuel can adapter. Place the cap on the fuel can. Separate the vent tube and place the adapter and tube, with the wrenches, in the tray of the spare parts box.

56. Firing with a Wood Fire

a. If for any reason it is impossible to use the regular burners, the oven may be operated with a wood fire.

b. If the lower section of the oven is available, a wood fire may be built in the burner chambers. If this is done, the proofing chambers will become too hot for use and an improvised proofing chamber must be set up as described in paragraph 54*g*(5).

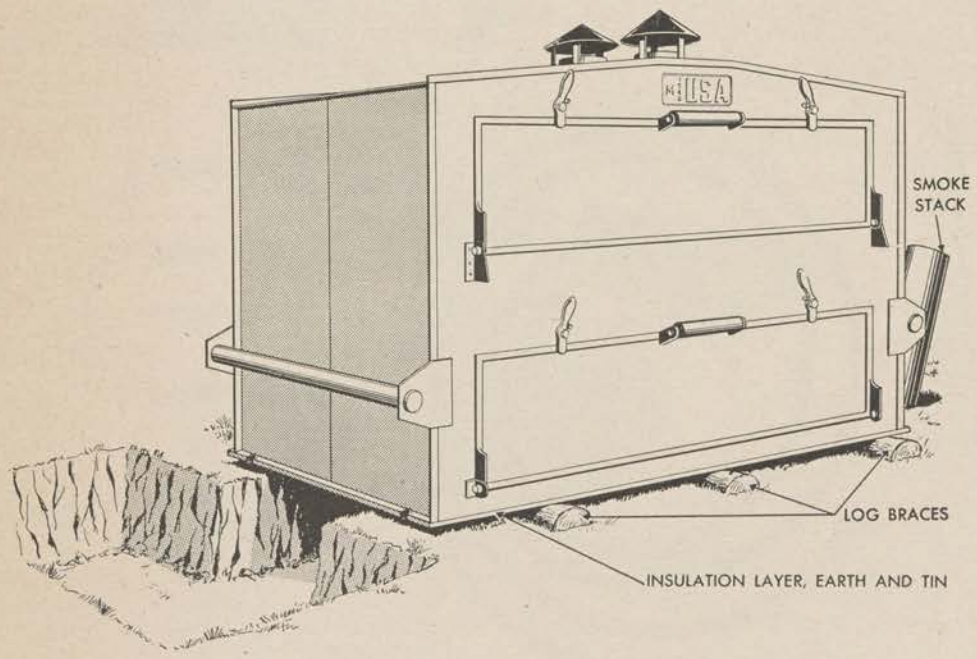

Figure 71. Top section of oven, bake, field, M1942, used with wood fire.

c. If the lower section of the oven is not available, holes may be constructed as outlined in paragraph 54*g* and wood fires built in these.

d. Another procedure for using a wood fire is as follows (see fig. 71):

(1) Dig a firing trench about 8 feet long, $3\frac{1}{2}$ feet wide, and 20 inches deep. Extend the cut at the firing end to make a convenient firing pit. At one end of the firing pit, dig a hole and insert a drain bucket.

(2) Improvise a trench cover as insulation for the oven bottom. Make the trench cover in the form of a "sandwich" with a layer of mud between two metal sheets. The metal sheets may be constructed by cutting up large tin cans and flattening them out. Cut holes in each sheet for the oven flues and for the smokestack ((5) below).

(3) Lay three log braces across the trench and then put the trench cover and the top section of the oven into position.

(4) Seal the bottom edges of the oven with mud and lay a layer of dirt in the bottom chamber.

(5) Improvise a smokestack and fit it over the hole in the trench cover.

(6) Maintain a steady fire in the trench. For the method of supporting the trench walls if the oven is to remain in place for some time, see paragraph 59*b*.

Section II. OVEN, BAKE, ARMY FIELD, NO. 1

57. General

Bake oven No. 1 (stock No. 65–A–1240) is a portable, knock down oven which is to be assembled in the field. (See fig. 72.) Its average baking time is $1\frac{1}{2}$ hours, and its daily output is approximately 1,700 pounds of field bread or 2,200 pounds of garrison bread. Each of the three baking chambers holds six pans. For an even bake, the pans should be shifted during the baking.

58. Parts

a. The oven, made in 12 principal metal parts, is issued with a canvas cover. (For a list of all the components, see sec. XII, app.) The parts are numbered as follows (see fig. 73):

1A. Front end.
2A. Rear end.
3A. Left side.
4A. Right side.
5A. Trench cover.
6A. Top.
7A. Stovepipe, lower.
8A. Stovepipe, upper.
9A. Pipe, elbow hooded.
10A. Bottom oven chamber.
11B. Middle oven chamber.
12C. Top oven chamber.
13A. Canvas cover.

b. There are also stovepipe wires and metal clamps provided to secure the front, sides, and rear.

59. How to Assemble

a. Dig a trench 10 feet long, 30 inches deep, and from 18 inches in width at the top to 16 inches at the bottom. Enlarge the cut at the firing end

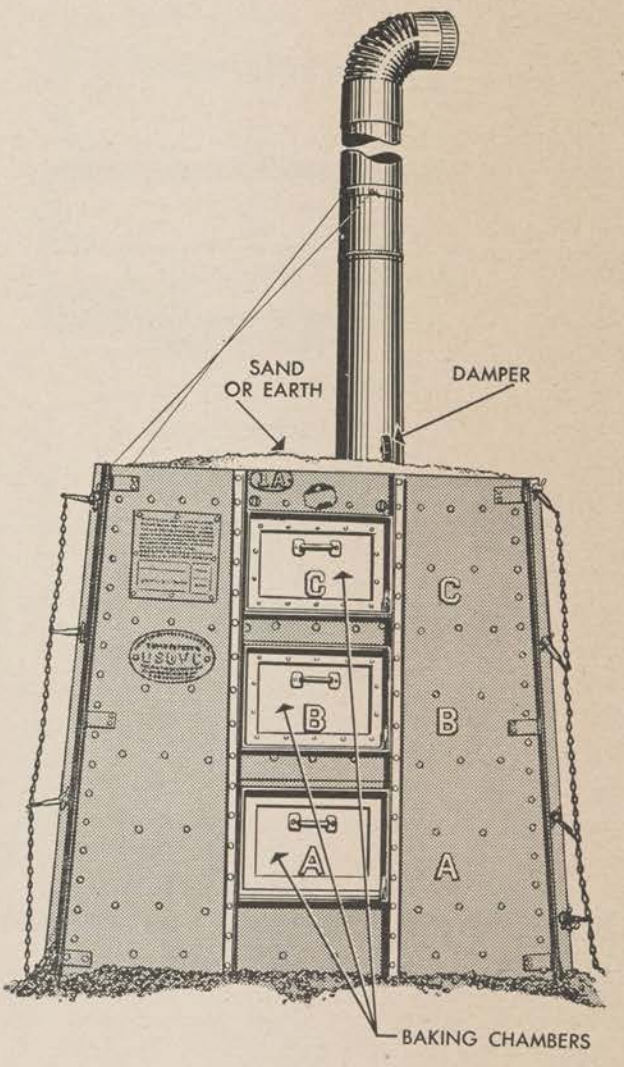

Figure 72. Oven, Army field, bake, No. 1 (65–A–1240).

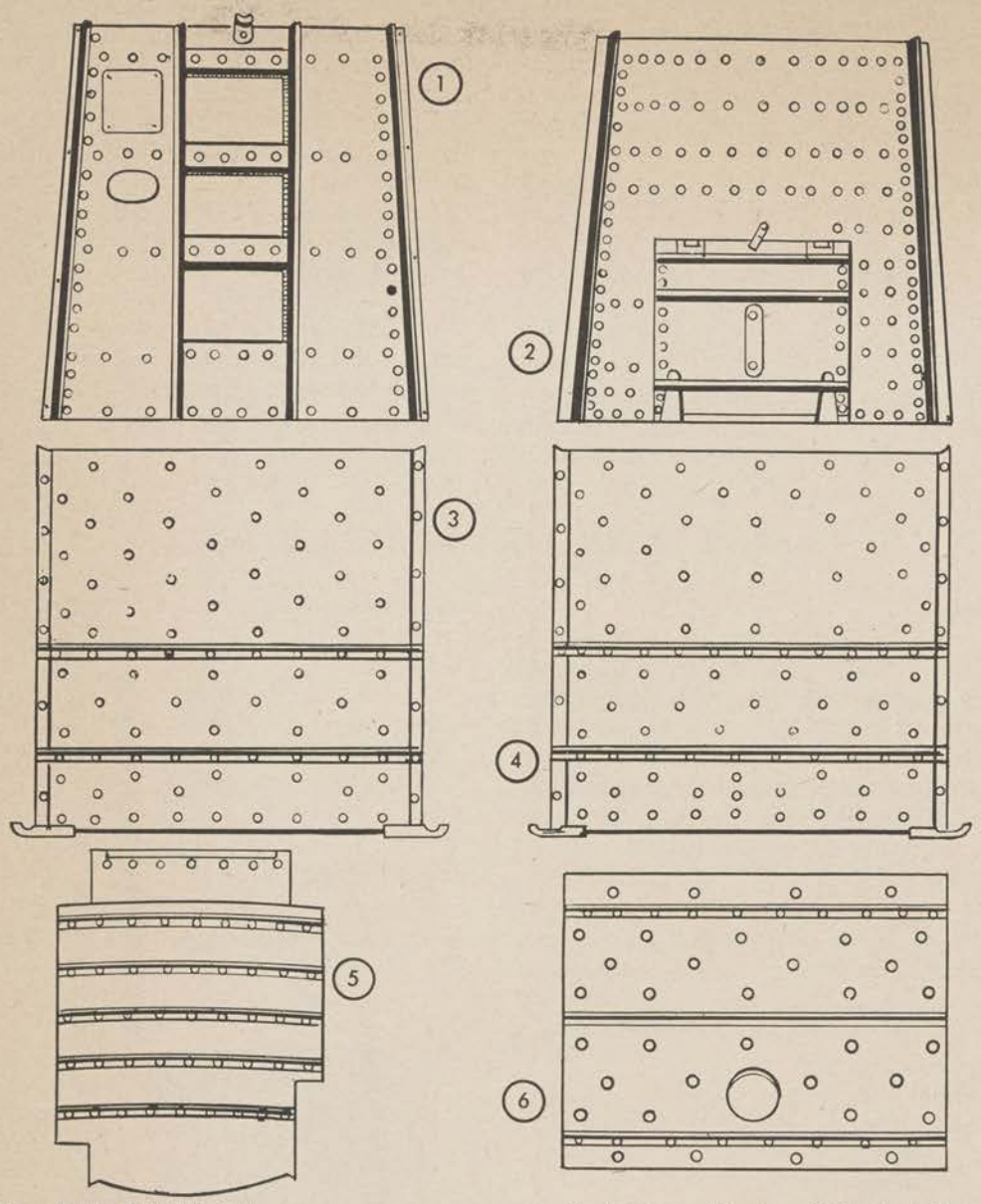

1. 65-A-1180 *Front: part No. 1-A.*
2. 65-A-1010 *Back: part No. 2-A.*
3. 65-A-1330 *Side, left: part No. 3-A.*
4. 65-A-1335 *Side, right: part No. 4-A.*
5. 65-A-1130 *Cover, trench: part No. 5-A.*
6. 65-A-1340 *Top: part No. 6-A.*
7. 65-A-1090 *Chamber "A": part No. 10-A (Door, chamber, part No. 10-A, Stock No. 65-A-1160).*
8. 65-A-1095 *Chamber "B": part No. 11–B (Door, chamber, part No. 11-A, Stock No. 65-A-1165).*
9. 65–A–1100 *Chamber "C": part No. 12-C (Door, chamber, part No. 12-A, Stock No. 65-A-1170).*
10. 65-A-1290 *Pipe, upper: part No. 8-A.*
11. 65-A-1285 *Pipe, lower: part No. 7-A.*
12. 65-A-1250 *Pipe, elbow, hooded: part No. 9-A.*
13. 65-A-1125 *Cover, canvas: part No. 13-A.*
14. 65-A-1328 *Scraper and rake, bake-oven, Army field, No. 1, combination, fire.*
15. 65-A-1210 *Hook, pan, 5-foot.*
16. 65-A-1325 *Rod, bracing, smoke-stack.*
17. 65-A-1015 *Bar, grate, single.*
18. 18-T-1360 *Thermometer, field bake oven.*

Figure 73. Component parts of oven, bake, Army field, No. 1 (65-A-1240).

(that is, the back end) in order to make a firing pit at least $3\frac{1}{2}$ feet square, to provide convenient access. In the center of each end of the firing pit dig a hole large enough to hold a drain bucket. If two or more ovens are to be used, they may be set up side by side, with a common firing pit long enough to connect with all the fire trenches.

b. Whatever type of firing is employed, the walls

of the fire trench will need to be supported if the trench is to be used for more than a short time. In sandy ground, unsupported walls will not last for more than 48 hours; in loam they will last about a week; in adobe or gumbo, they will last for 2 or 3 weeks. Walls of the fire trench may be supported by a lining of brick or by pieces of galvanized iron sheeting, held in place by pins driven into the ground. The first fire in the trench should be a small, steady one, in order to bake the trench walls slowly and to dry out the sheet asbestos between metal parts of the oven without warping.

c. Make certain that all parts of the oven are in proper condition; straighten any bent parts.

d. Put the trench cover (No. 5A) on the ground so that the closed end will extend 6 inches beyond the front of the trench. Be sure that the trench cover fits the ground closely all around.

e. Stand the sides (Nos. 3A and 4A) into position, parallel to the trench, each side extending about 1 foot in front of the trench cover.

f. Stand the front end of the oven (No. 1A) into position. Hook and clamp the edges to the sides of the oven; All corners of the oven should

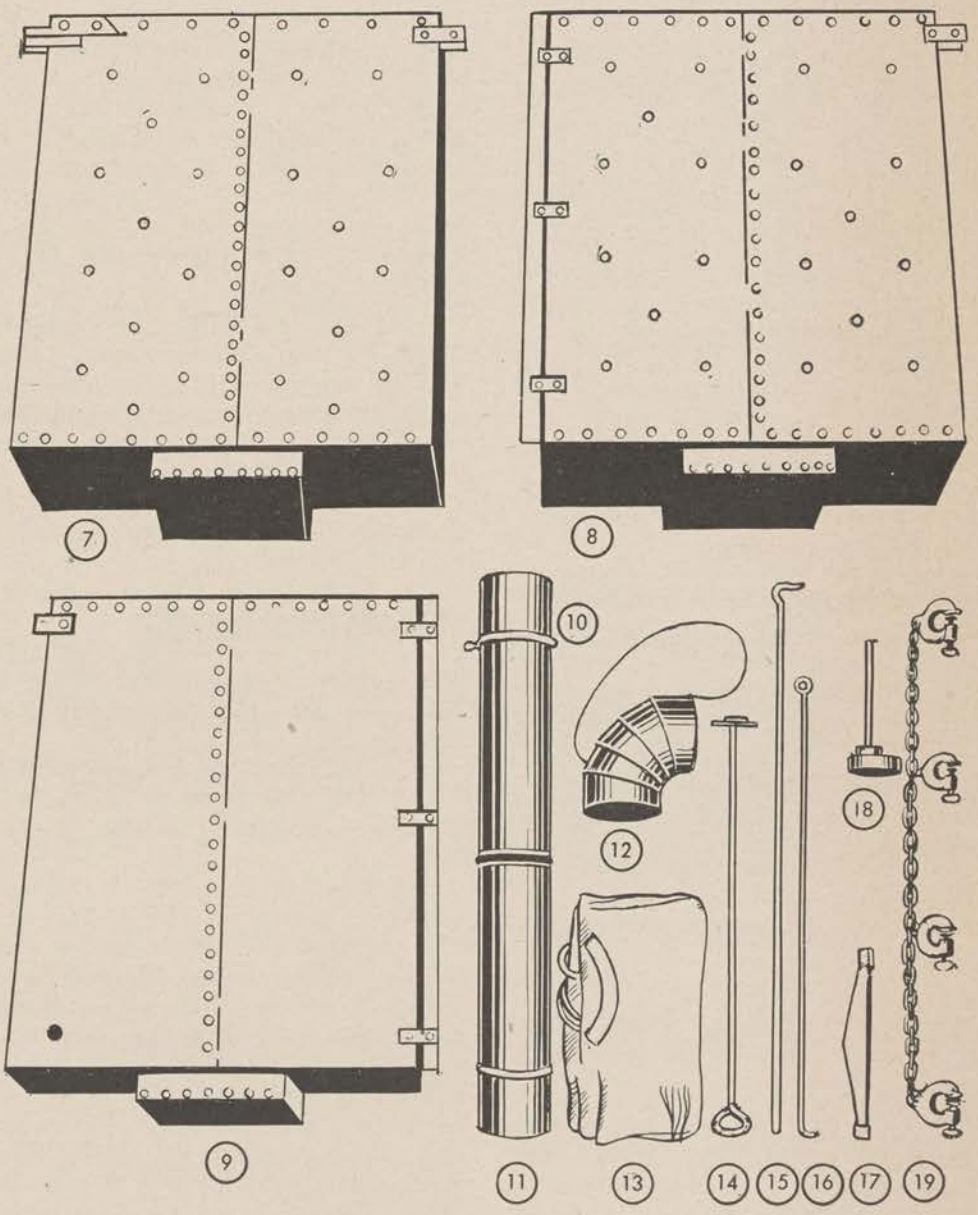

Figure 73. Continued.

rest on small boards in order to equalize the weight.

g. Place the oven chambers and doors (Nos. 10A, 11B, and 12C) into position. To fasten the chambers, three men work together. One man stands in front of the oven, holding a rope or a bar which has been put under the neck of the chamber. The two others at the rear of the chamber lift and push it forward until the flanges rest on lugs on the sides of the oven. Place the bottom chamber first, then the middle, then the top. After the three chambers have been placed, insert a piece of wood about 1 inch square under each flange in order to make it possible to place the rear end into position.

h. Stand the rear end (No. 2A) into position and engage the bottom angle irons with hooks on the bottom of the sides (Nos. 3A and 4A). Fasten the clamps to join the rear end tightly to the sides.

i. Put the top of the oven (No. 6A) into place, resting it on angle irons attached to the sides. The flue hole should be at the right center. Place a small stone or a small piece of brick under the collar of the flue hole, near the center, to support the weight of the dirt which will cover the top.

j. Attach the stovepipe (Nos. 7A and 8A) and the stovepipe hood (No. 9A) and fasten the pipe braces to the oven.

k. Stop up the cracks between the top and the sides with clay or mud, or cover them with heavy paper. If this is not done, dirt will sift down into the oven.

l. Cover the top of the oven with dirt taken from the trench, making a mound about 8 inches high at the center and 5 inches high at the edges.

m. Stop up the cracks around the necks of the oven chambers with asbestos cement or dry, loose asbestos rope. If these materials are not available, use mud or clay.

n. If it is raining or snowing, tie on the canvas cover. In clear weather do not put on the cover until the baking is completed.

o. Leave the oven doors open and start a slow fire in the trench to evaporate all moisture. An exceedingly hot fire will damage the oven and the trench cover.

60. Firing Oven with Burner, Oven, Bake, Army Field, No. 1 (Wynne Oil Burner) (Stock No. 65–A–1058)

a. The Wynne oil burner (fig. 74) is a portable kerosene burner designed especially to furnish heat for the field bake oven No. 1. It should be placed in the fire trench on a grate, or on bricks about 18 inches below the oven.

b. Assemble the burner in the following manner (see fig. 75):

(1) Adjust each retort valve so that the orifice is centered on the opening of the flame pipe, at a distance of $\frac{3}{8}$ to $\frac{1}{2}$ inch.

(2) Clean the openings of the retort pipes with the wire tool or reamer.

(3) Put the flame pipes into position so that one row of holes in each pipe is directed on the retort base and the second row of holes is directed outward toward the walls of the trench.

Caution: The holes are lined with porcelain, which is easily damaged and should not be cleaned.

(4) Level the burner in the center of the trench, with the operating valves extending 10 inches back of the oven. (See fig. 75).

(5) Set a 14- to 16-gauge drum of kerosene on the ground beside the firing pit. Connect the feed line from the drum to the burner. Be careful to wipe all gaskets clean before placing them on the drum connections and to use only the proper wrenches for tightening the nuts. Do not use pliers or Stillson wrenches.

c. To light the burner, follow these directions:

(1) Tighten all connections; close the barrel feed-line valve (No. 1); attach the air pump; and pump 20 pounds of pressure into the drum. Do not allow the pressure to drop below 15 pounds during the entire baking operation.

(2) Close the feed-line needle valve (No. 2) and open the retort control valves (Nos. 3 and 3A) one full turn.

(3) Lay a rag or a piece of paper in the generator pan to serve as a wick.

(4) Open the barrel feed-line valve (No. 1) one-fourth to one-half turn and open the generator pan valve (No. 4). When the pan is full of oil, close the valve. (No. 4).

(5) Open the stack damper on the oven.

(6) Ignite the paper or rag. For safety, lower the sheet metal shield attached to the rear of the oven.

(7) When the oil in the generator pan is nearly consumed, open control valve (No. 2) very gradually and then close the valve for a trial. If the burner is sufficiently hot, vapor will be ejected from the retort orifices. If the vapor decreases, allow a small amount of oil to flow into the retort pipes and continue this until the burner can generate with the control valve (No. 2) wide open. If the burner will not generate with the first charge of oil in the pan, repeat the lighting operation. Old type burners will ordinarily heat up sufficiently in about 15 minutes; the new heavy duty burners will heat up in 25 to 30 minutes.

d. To control the burner while it is in operation, proceed as follows:

(1) After the burner is working satisfactorily, adjust the stack damper to an angle of 45°.

(2) Keep retort valves (3A and 3B) wide open until the heat in the oven reaches the necessary baking temperature. Then close the valves gradually to a point where the proper temperature is maintained. Be sure to adjust both valves to the same point.

(3) If the flame tends to blow away from the holes in the flame pipe without burning, move the valve orifice nearer to the end of the flame pipe.

(4) If low pressure causes the flame to go out, do not relight the burner until the retort pipes are cleared of vapor. Close the barrel feed-line valve (No. 1) and disconnect the feed line at this point. Attach the air pump and blow air through the unit.

(5) To relight the burner after it has gone out, connect the drum feed line, close the control valve (No. 2), and open the feed-line valve (No. 1). Using a pan hook, place a burning rag in the front end of the generator pan. Open the generator pan valve (No. 4) and allow about 1 tablespoon of oil to flow onto the rag; then close the valve. When the oil is burning, reopen the generator pan valve and allow about one-fourth of a charge of oil to flow into the generator pan. A hot burner should start with the burning of this small charge.

(6) To turn off the burner, close feed-line and control valves (Nos. 1 and 2). The retort valves (3A and 3B) must be kept open.

61. Firing Oven with Improvised Oil-and-Water Burner (Dodson Burner) (see figs. 59 and 60)

a. The improvised oil-and-water burner described in paragraph 42*c* may be used satisfactorily with the field bake oven No. 1.

b. Place the drums at the top of the firing pit, one at each side and attach the tubing as illustrated in figure 60.

Caution: Since this improvised oil-and-water burner produces smoke, it should never be used when it is necessary to conceal the position of the oven.

62. Firing Oven with Wood

In firing the oven with wood, place the wood carefully and control the position of the fire so that the sides of the trench are not damaged, particularly if they are unsupported. Use a standard or an improvised grate, about 18 inches below the oven. With seasoned wood, baking temperature in the oven can be produced in 1½ to 2 hours after the fire is started.

63. How to Dismantle for Storing or Transportation

a. To dismantle the oven in order to store it or to move it, proceed as follows:

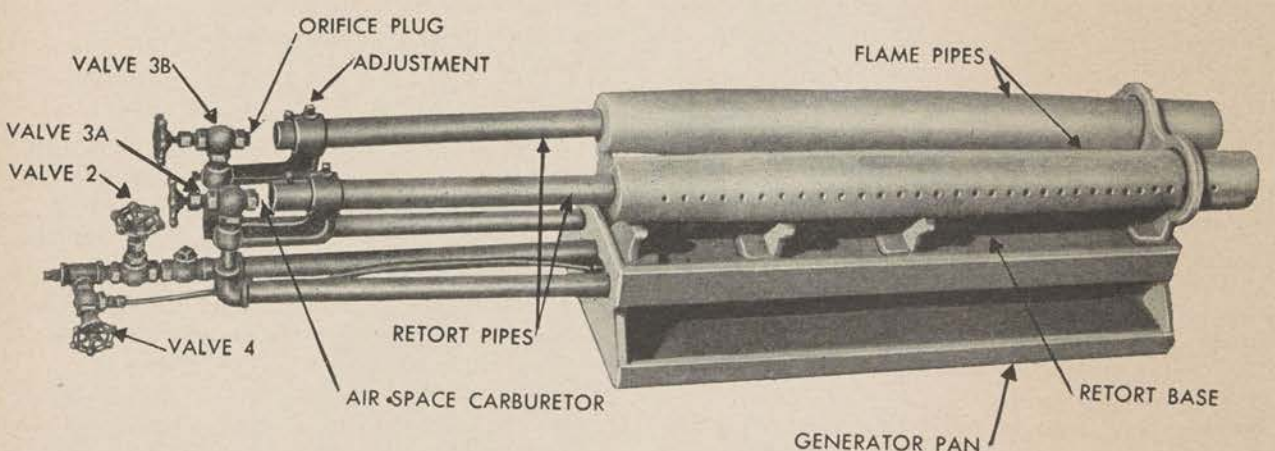

Figure 74. Burner, oven, bake, Army field, No. 1 (Wynne oil burner) (65-A-1058).

(1) Remove the canvas cover and the back of the oven.

(2) Clean off all dirt from the top of the oven and rake the dirt into the fire trench.

(3) If asbestos rope has been used around the oven chambers, remove it for future use.

(4) For support, put some wood in the space

between the trench cover and the bottom of the chamber, and also in the spaces between the chambers.

(5) Remove the sides of the oven. Lay the chambers on the ground for cooling and cleaning.

(6) If the oven is to be stored, coat the interior of the chambers, especially the floor, with cosmoline or some other rust preventive.

b. For convenience in transportation, place the stovepipe joints, hood, and clamps inside chamber A. Place the bakepans in chambers B and C, 18 in each.

Section III. IMPROVISED OVENS

64. General

a. On rare occasions it may be necessary to bake bread in the field without a standard type oven. Easily constructed improvised ovens can produce excellent bread if used properly.

b. For instructions covering the use of the Army field range M1937 as an oven, see paragraph 32.

c. There are two general classes of improvised ovens, those constructed in the manner of the M1942 oven, with both a firing chamber and a baking chamber (see fig. 76), and those consisting of a single baking chamber only (dutch oven). (See fig. 77.) In the latter type the fire is removed after the baking chamber is sufficiently heated to carry through the baking period.

d. Walls of an earth oven must be about 8 inches thick in order for the oven to retain enough heat for baking. Except for the oven described in paragraph 65, the earth oven tops should not be much thicker than 8 inches or they may cave in.

e. A slow fire is needed for heating an improvised oven. An intense fire of short duration will heat only the lining.

f. If the soil surrounding the baking chamber is damp, dry it out thoroughly before attempting any baking. Keep up the fire for several hours before the first charge and preheat the oven from 45 minutes to 1 hour for each successive charge. If necessary, construct a hearth of stone or brick to control excessive ground moisture.

65. Earth Oven

a. A simple type of oven may be improvised by digging horizontally into a steep bank of earth 4 to 6 feet high. (See fig. 77.) The best tools for the purpose are a spade and a long-handled shovel.

b. Make the face of the bank as nearly vertical as possible.

c. Excavate an area in the bank 4 or 5 feet wide, $2\frac{1}{2}$ feet deep, with an arched roof about 16 inches high at the center. The top covering of the oven should be about $1\frac{1}{2}$ feet thick. Keep the opening as small as possible.

d. Dig a hole for a draft at the rear of the oven and if possible attach a piece of stovepipe. If for any reason, however, material suitable for a stack cannot be obtained, the oven will function almost as well without it.

e. To keep heat in the oven, salvage scrap metal suitable for a door. Regulate the temperature in the oven by using the door and by adjusting the length of the flue. Oven temperature may be determined by the hand count method, as follows: hold your hand in the oven 1 inch from the bottom and count slowly; if you can hold your hand in this position for seven counts, the temperature is right for baking. If the count is less than seven, the oven is too hot; if it is more than nine, the oven is too cold.

66. Barrel Oven (see figs. 78 and 79)

A very satisfactory oven may be constructed by using wooden barrels as a framework.

a. ONE-BARREL OVEN. (1) Knock the top or bottom from a barrel and place the barrel on level ground, with the closed end at the rear. If bricks or flat stones are available, lay a floor and place the barrel on this.

(2) If sand is available, cover the barrel with a layer sloping from a thickness of 2 inches at the top to 4 inches at the sides.

(3) Cover the layer of sand (or the barrel) with a heavy mixture of clay and grass or hay. Work from the sides upward and make the layer of clay about 12 inches thick at the sides and 6 or 8 inches thick at the top. If the barrel is not covered by sand, make this layer of clay somewhat heavier. If a brick floor has been laid, extend the clay walls beyond the floor.

(4) Allow the form to stand for 48 hours; then start a small fire in the barrel and burn it out. When the barrel is completely burned, scrape out the sand and loose material.

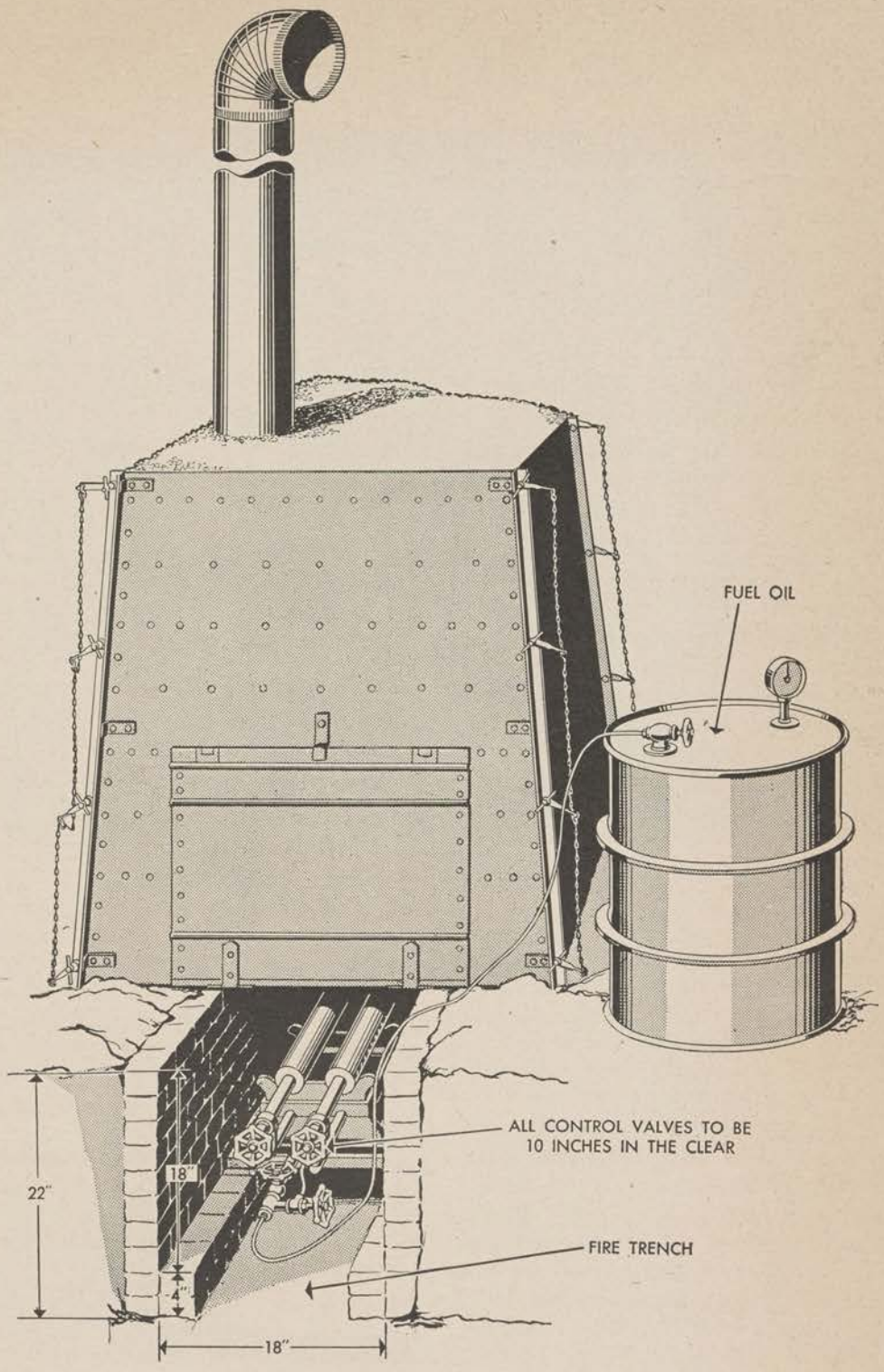

Figure 75. Wynne oil burner (65–A–1058) in use with oven, bake, Army field, No. 1.

(5) For convenience in handling the bread, dig a 2-foot trench in front of the oven.

(6) Use a suitable piece of metal for the door, fitting it as tightly as possible.

(7) Keep up a moderate fire in the oven for about 2 hours. While the dough is being punched down, spread the coals evenly over the floor of the oven and close the door as tightly as possible. When the dough is ready for the pans, draw all the coals from the oven. Seal it up again for half an hour and then test the temperature by the hand count method described in paragraph 65*e*. If the temperature is correct, put in the bread.

(8) Before baking a second run, fire the oven for 45 minutes and then draw the coals. Close the oven for 15 minutes.

b. Two-barrel oven. (1) To construct a two-barrel oven, knock the top and bottom from one barrel and the top from another. Place the two barrels end to end on level ground, with the closed end at the rear. If bricks or flat stones are available, lay a floor and place the barrels on this. For a still larger oven, two additional barrels may be placed beside the first two.

(2) For additional instructions, see paragraph 66*a*(2) to (8) inclusive.

67. Oil Drum Oven (see figs. 80, 81 and 82)

a. To construct an oil drum oven, dig a trench as illustrated in figure 82. The narrow part of the

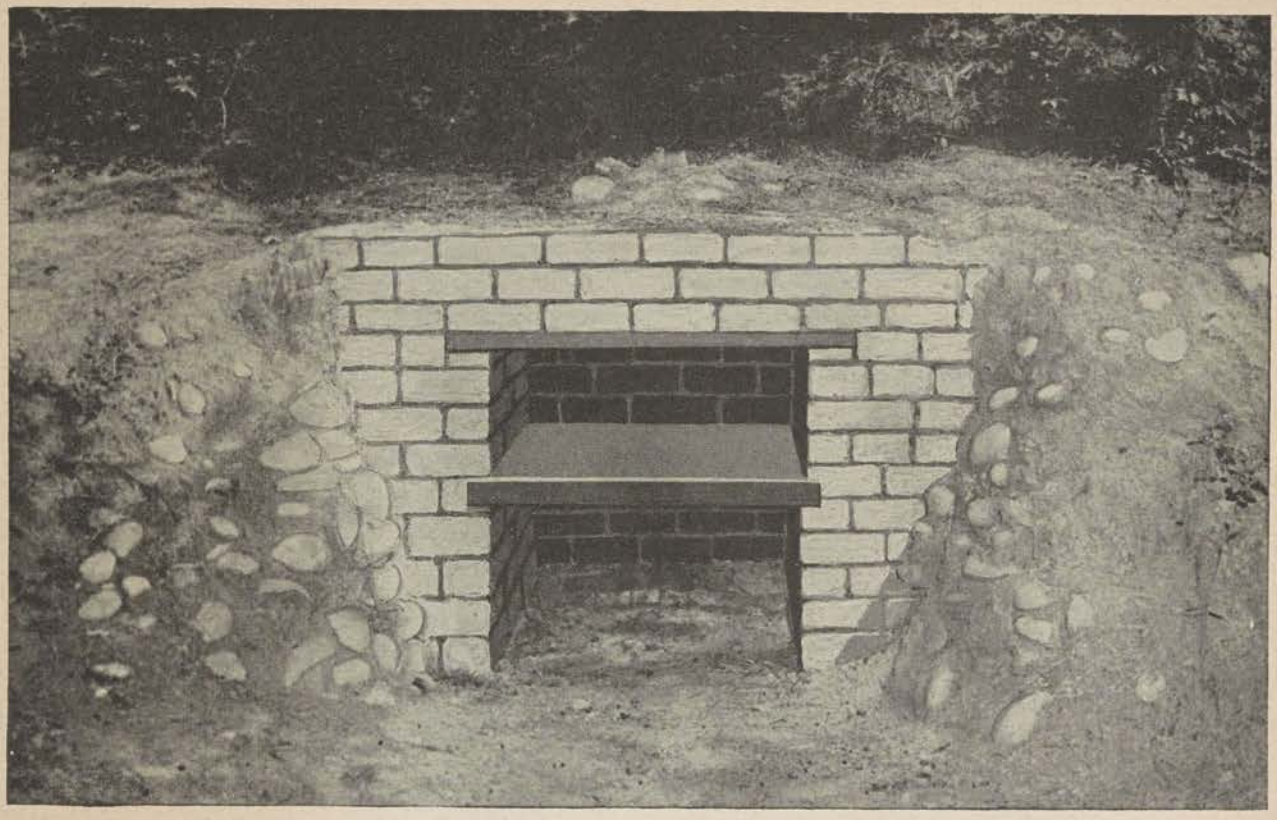

Figure 76. Improvised earth oven with firing and baking chambers.

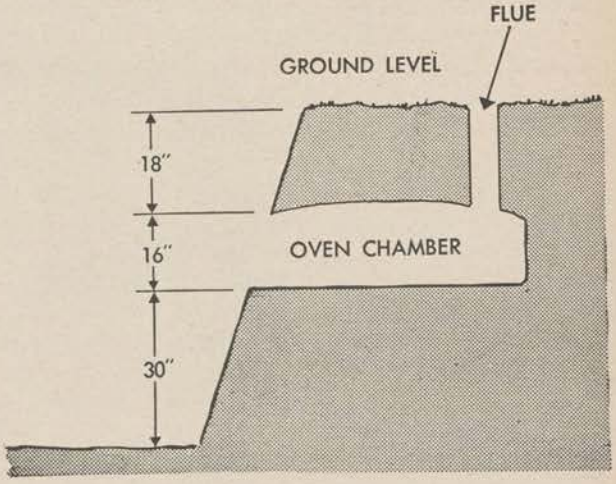

Figure 77. Cross section of simple type dutch oven.

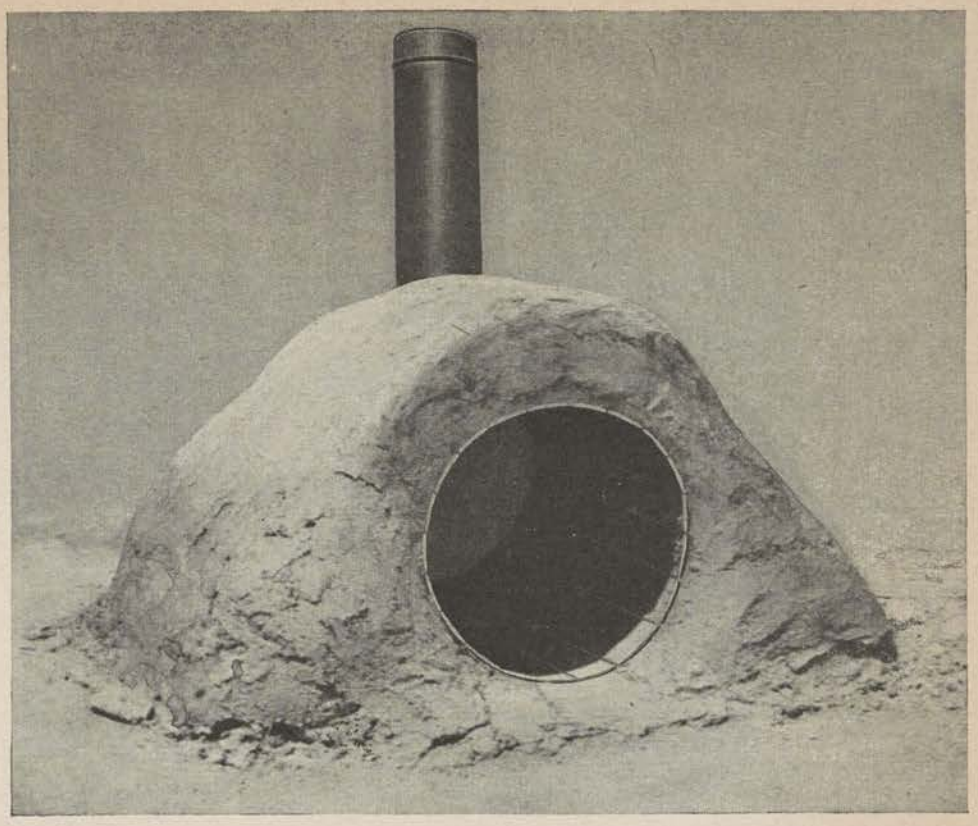

Figure 78. Single-barrel clay oven.

trench, near the smokestack, is designed for a hot plate, or improvised stove, and may be eliminated if this is not desired.

b. Place a 55-gallon drum crosswise over the trench, making sure that it is secure at both ends. Install a sheet of metal (stove lid or any improvised material) over the narrow part of the trench, to serve as a hot plate.

c. Cover the drum with a layer of mud or clay and fill in the spaces around the hot plate and the smokestacks. (See figs. 80 and 82.)

d. Improvise a metal door for the oven and see that it fits tightly.

e. Using the firing pit as a convenient place to work, build a slow, steady fire in the fire trench, to dry out the hearth and the covering of the oven.

68. Sod Oven (see fig. 83)

a. Prepare a hearth of brick, stone, or hard clay, 3 feet 8 inches by 6 feet or more.

b. Cut pieces of sod about 12 inches by 10 inches and build the oven by overlapping the layers of sod to a height of 2 feet 8 inches. Insert a piece of stovepipe and then cover the sod framework with a heavy layer of clay or firm soil. Leave an opening at the front for the door.

c. Fit a suitable metal door.

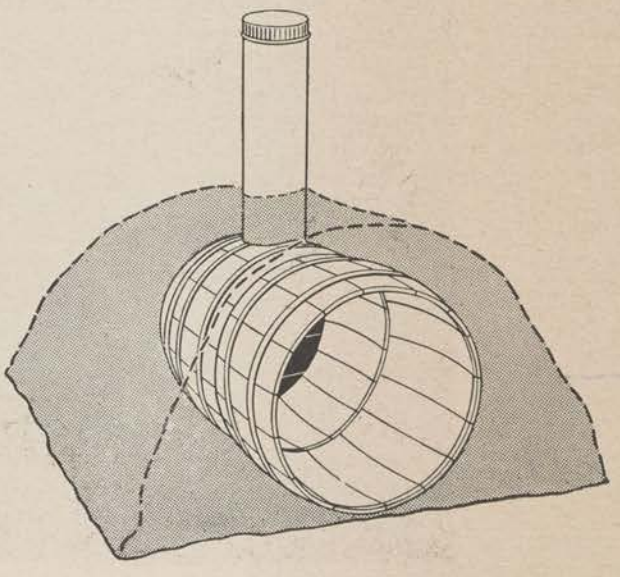

Figure 79. Two-barrel clay oven.

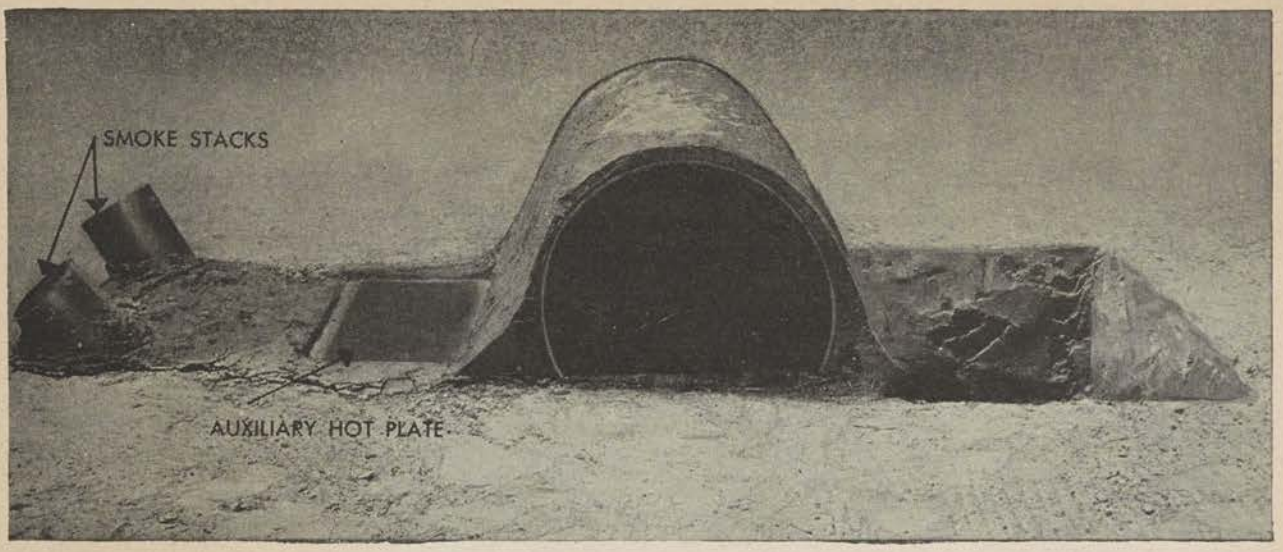

Figure 80. Oil drum oven, front view.

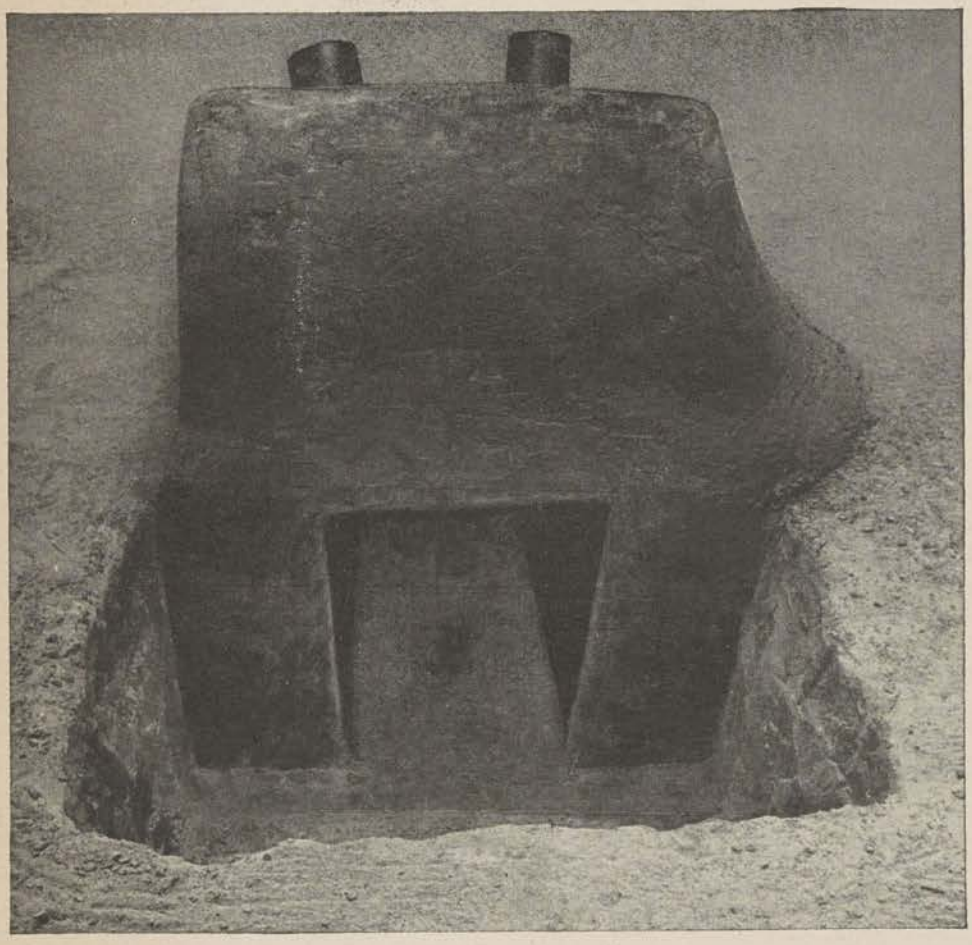

Figure 81. Oil drum oven, side view.

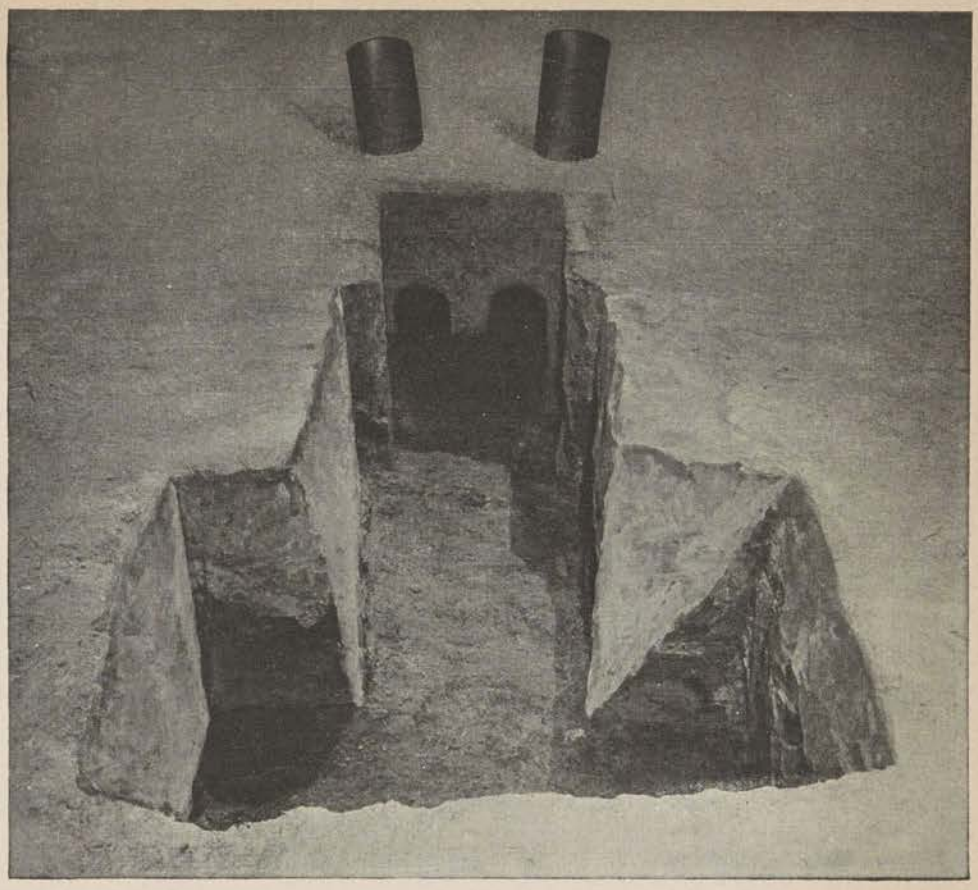

Figure 82. Excavation for oil drum oven.

69. Miscellaneous

Because improvised ovens have been in use for thousands of years, there are many types of them and many variations in methods of construction. Ovens may be of widely differing styles, and of materials ranging all the way from common clay to gas mask cans. Remembering the few elementary principles of oven construction which have been illustrated in this section, an ingenious baker may use whatever materials he finds available for the construction of an emergency oven.

CHAPTER 5

STOVE, TENT, M1941, COMPLETE

70. General

a. Tent stove, M1941, complete (stock No. 65–N–2500) (see fig. 84) is a heating stove which may be operated with wood or coal, or with an oil burner. Conversion from one type of operation to the other may be quickly and easily accomplished.

b. The stove is designed for use in any one of seven types of tents: assembly, hospital ward, pyramidal, large wall, small wall, storage, and squad M1942. The basic parts of the stove are as follows: one base, one grate, one separation ring, one top with cover, and six 2-foot joints of 4-inch stovepipe. One shovel and one shaker are also supplied with each stove. Other parts, furnished as required, are hoods, arrestors, elbows, shields and additional lengths of pipe. (See fig. 85.)

c. The following tables show the component parts of the tent stove M1941, and, according to the type of tentage, the accessories required:

(1) *Components* (see fig. 85):

Item No.	Stock No.	Components	Quantity
1	65–N–1300	Base, stove, tent, M1941	1
2	65–N–1700	Grate, draw, stove, tent, M1941	1
3	65–N–1705	Grate, round, stove, tent, M1941	1
4	65–N–1860	Pin, cotter, stove, tent, M1941	1
5	*65–N–2000	Pipes, stove, tent, joints or sections, straight, 4"	6
6	65–N–2050	Poker, 24-inch, stove, tent, M1941	1
7	65–N–2100	Rings, adapter, stove, tent, M1941	1
8	65–N–2200	Shaker, stove, tent, M1941	1
9	65–N–2400	Shovels, stove, tent, M1941	1
10	65–N–2600	Top, stove, tent, M1941, with lid	1

*This listing provides the proper components of stove pipe per stove when used in the following tents: assembly, hospital ward, pyramidal, squad, and small wall. Tent stoves for storage tents and large wall tents require two extra joints per stove in the case of the storage tent, and one extra joint per stove in the case of the large wall tent, in addition to the components listed above under stock No. 65–N–2500. Type of pipe indicated is the unnestable type and should be used only in the continental United States. The nestable pipe, stock No. 65–N–2010 should be requisitioned for oversea installations or in cases where shipping space is critical.

(2) *Accessories.* The following accessories are necessary for various tentage but are not stocked with the complete stove under stock No. 65–N–2500 and should be requisitioned separately when ordering stoves for use in the various tents as indicated in the table below. All requisitions for tent stoves should clearly state what type of tent is being equipped. If tentage is not known at time of shipment, component parts for pyramidal tents will be supplied.

Stock No.	Accessories	Tent, assembly	Tent, hospital ward	Tent, pyramidal, M-1934	Tent, squad, M-1942	Tent, storage	Tent, wall, large	Tent, wall, small
65–N–1200	Arrestors, spark, tent, M1941	4	3	1	2	1	1	1
65–N–1500	Dampers, stovepipe, 4"	4	3	1	2	1	1	1
65–N–1800	Hoods, stovepipe, tent, galvanized iron	0	0	1	0	0	0	0
65–N–1900	Pipes, stove, tent elbow, 4"	8	0	0	4	2	2	2
65–N–2310	Shields, tent, galvanized iron with elliptical hole	0	3	0	2	0	0	0
65–N–2300	Shields, tent, galvanized iron with round hole	4	0	0	0	1	1	1
	Components for stove, tent, M1941, per tent	4	3	1	2	1	1	1

71. How to Assemble and Operate

a. Place the base of the stove on the ground or the floor of the tent and lay the separation ring on top of it. Where stoves are set in tents with wooden floors a sandbox will be needed to protect the floor from the heat.

b. Insert the grate in the ring, with the shaker catch toward the front.

c. Put the top of the stove in place and see that all parts are secure.

d. Attach the stovepipe and extend it outside of the tent. If an arrestor, an elbow, a shield, or a hood is provided, attach the part where it is needed.

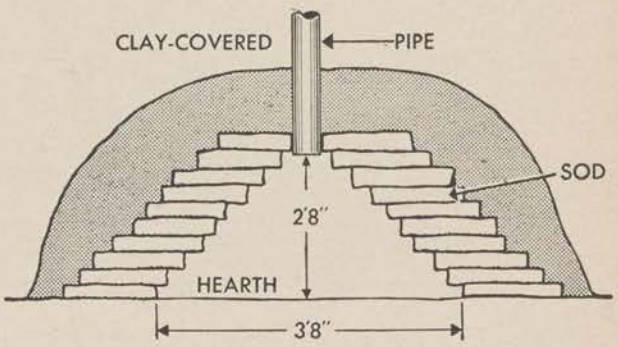

Figure 83. Sod oven.

(1) Tent shields (see fig. 86) are provided with either round or elliptical holes, depending on the manner in which the pipe is to go through the wall or the top of the tent.

(2) Place one shield on the inside of the canvas and one on the outside, centering the holes in the shields around the stovepipe hole in the tent. (See fig. 87.) Tuck the canvas into the raised metal edges on the shields and be certain that both shields are securely in place.

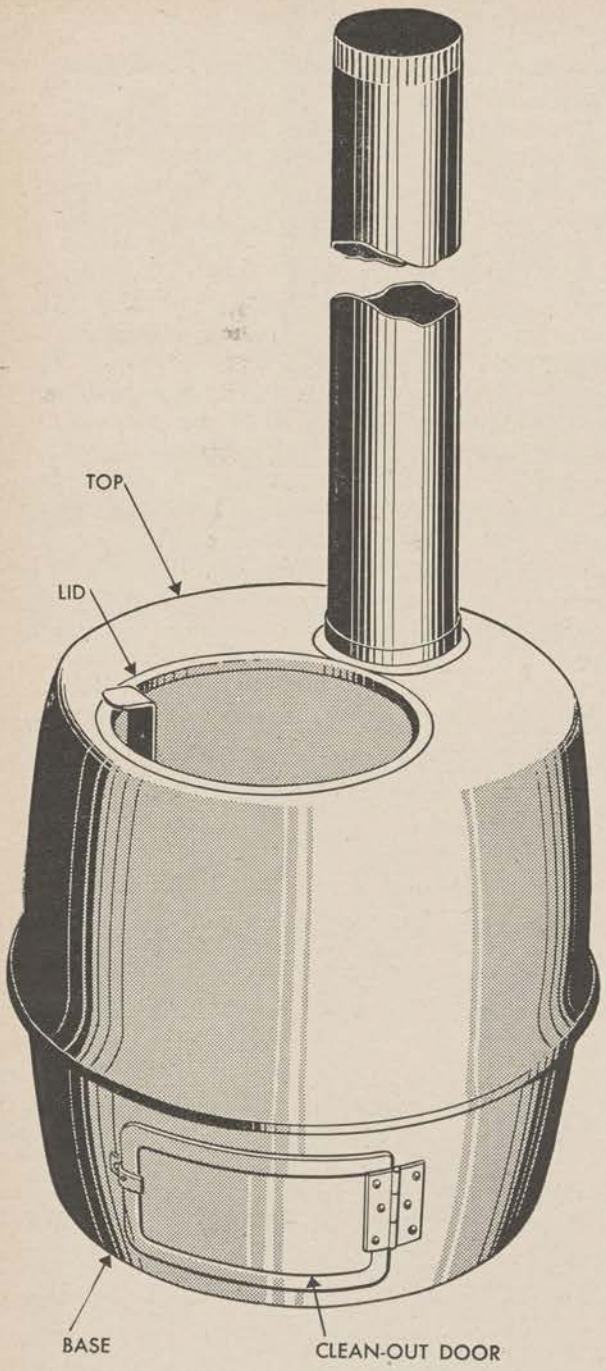

Figure 84. Stove, tent, M1941 (65–N–2500).

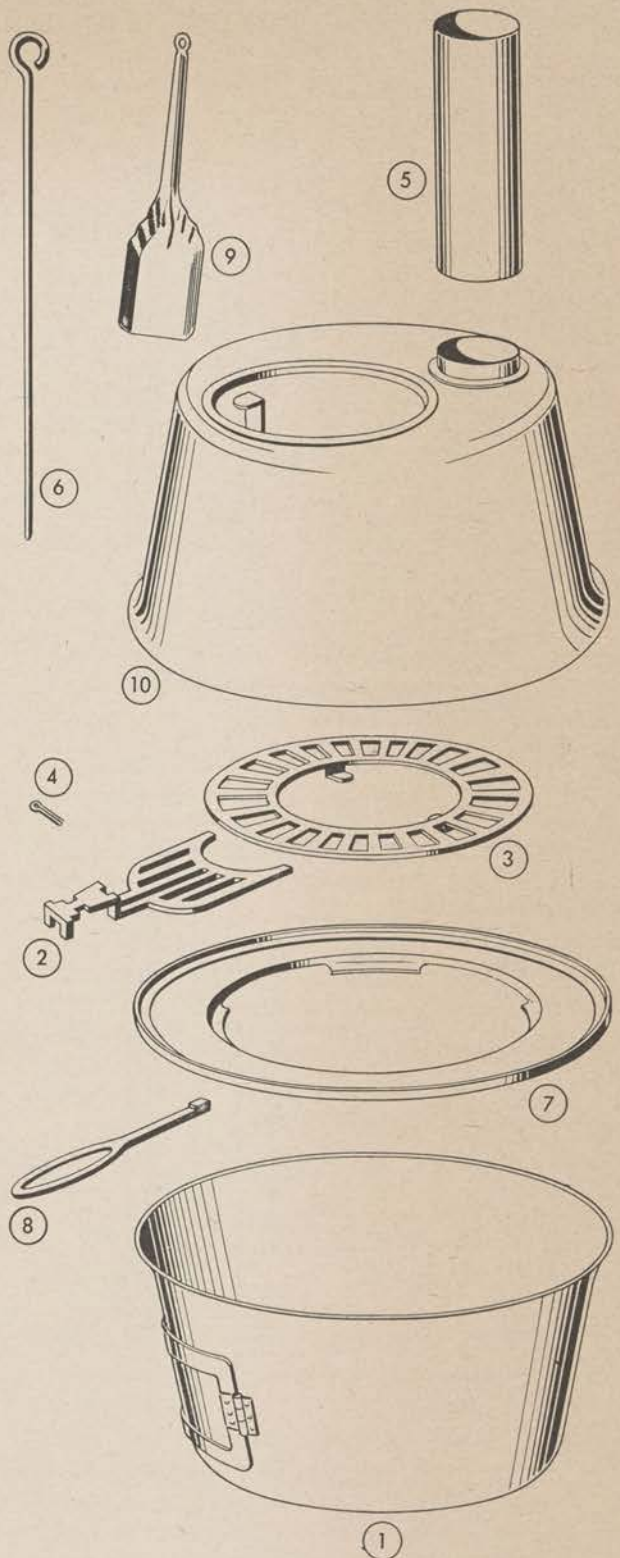

Figure 85. Component parts, stove, tent, M1941 (65–N–2500).

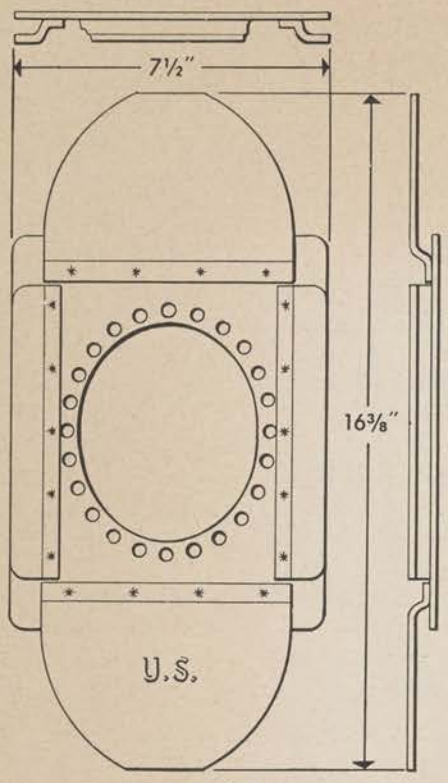

ELLIPTICAL HOLE
(65-N-2295)

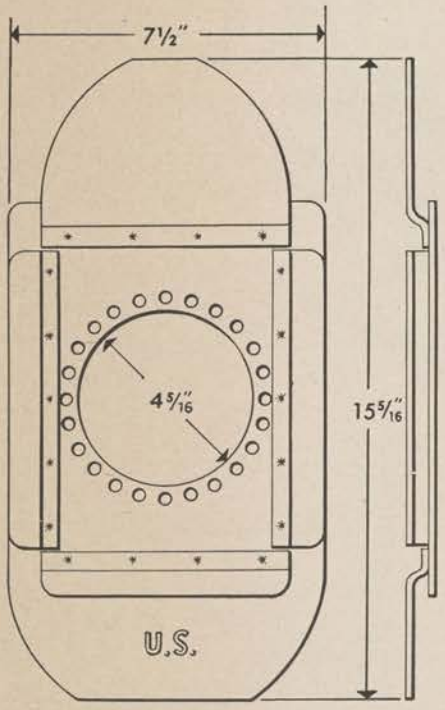

ROUND HOLE
(65-N-2297)

Figure 86. Shield, tent.

e. Open ash clean-out door to assist draft.

f. Build a fire on the grate through the hole in the top and then replace the cover.

g. To keep the fire burning well, and to prevent damage to the grate, do not allow the ashes to accumulate in the base of the stove.

h. Use the shaker and the poker sparingly. Do not ruin the fire and waste fuel by shaking burning wood or coal into the ashpit.

i. Keep smokepipe free of soot.

72. How to Assemble and Operate Oil Burner Outfit (stock No. 65–N–1375) (see fig. 88)

a. GENERAL. In theaters of operations where sufficient wood or coal is not available, or where the absence of smoke is a necessary consideration, the M1941 tent stove may be equipped with an oil burning attachment.

(1) The oil burner outfit for tent stove M1941 burns about 3 quarts of gasoline per hour without visible smoke, and will produce a minimum of 53,000 Btu's (British thermal units) per hour. This amount of heat is comparable to the maximum output of the stove when it is fired with coal. A greater amount of heat, up to 65,000 Btu's per hour, may be produced with the use of gasoline, but at this rate there will be a certain amount of smoke, and, moreover, the stove will become so hot that its length of service will be considerably shortened. At approximately 50,000 Btu's per hour the top of the stove will become a dull cherry color. This color increases in intensity and extends down the side of the stove when the output of heat is increased. When gasoline is used as fuel, the stove will warm up to its maximum output in about 15 minutes.

(2) When heavier fuel oils are used in the burner, the output of the stove is decreased and the warm-up period is lengthened. With No. 3 fuel oil the stove is about 10 percent less efficient than it is with gasoline, and it does not reach its maximum heat before 30 or 40 minutes.

b. COMPONENT PARTS. The oil burner outfit consists of the following parts:

Stock No.	Item	Quantity
65–H–1022...	Adapter, gravity, feed, 5 gallon gasoline can	1
65–H–1253...	Burner, oil, pot type, with flame spreader and locking clips	1
33–H–468....	Hose, gasoline, screw type	4
	Installation and operating instruction card	1
65–N–3500...	Valve, float, metering, burner, oil stove, tent M1941	1
65–H–3825...	Wrenches, burner, oil (3 to set)	1 set

Note. The gasoline can, or 55-gallon drum, is not included as a component of this unit as the container in which the gasoline or fuel oil is delivered will be used.

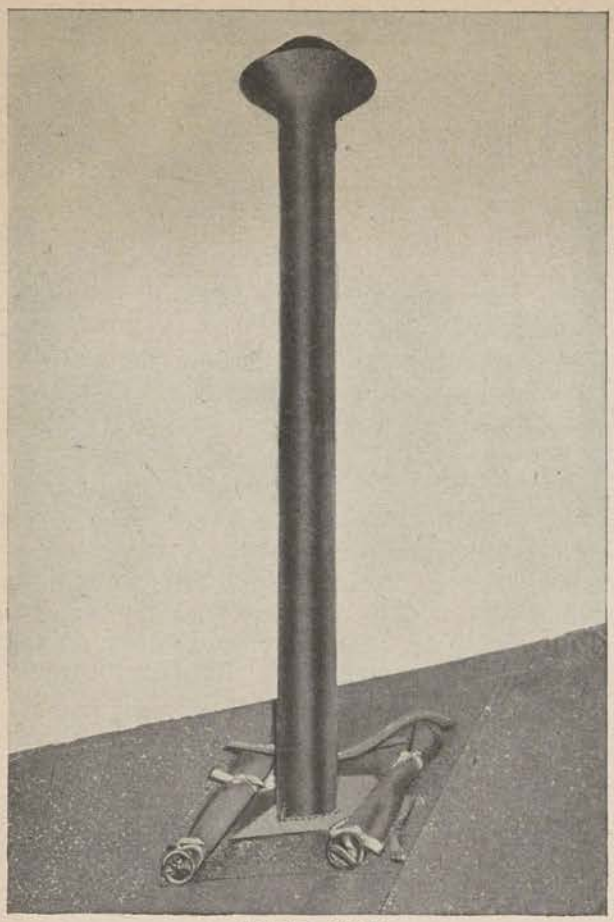

OUTSIDE VIEW

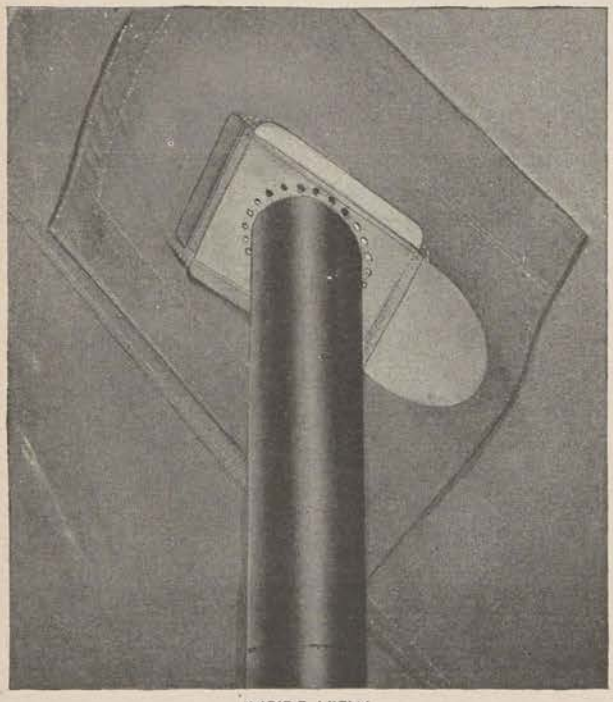

INSIDE VIEW

Figure 87. Shield, tent (round hole type), installed.

c. How to assemble. (1) Place the base of the stove on the ground or the floor of the tent and lay the separation ring on top of it. It the stove is already assembled for the use of coal, remove the stovepipe, the top, and the grate.

(2) Connect float valve to burner with pipe nipples; make connections tight enough to prevent fuel leaks and to hold float valve in level position. Float valve will be irreparably damaged if it is used as a pipe wrench in making joints tight.

(3) Insert the valve and the burner pot in the ring and extend the control out through the ash-pit door opening. Rotate the burner until its catches are engaged under the edge of the separation ring.

(4) Install the cast-iron air tube in the center of the burner.

(5) Attach the top section of the stove and the stovepipe.

(6) Connect the hose from the fuel tank adapter to the "inlet" fitting at the end of the control.

(7) Connect another hose to the overflow under the center of the float valve. This hose is to carry off any possible overflow and consequently must drain downward and discharge in a safe outside location.

(8) Remove the screw cap from a standard 5-gallon can of fuel and insert the adapter. With the cam loosened, screw the outer ring down firmly. At the same time hold the cam lever so that the vent tube is centrally located, pointing diagonally toward the opposite lower end of the can. Tighten the cam lever.

(9) Make certain that the inlet knob at the end of the control is in the OFF position. Then invert the fuel can and mount it on a suitable elevated support.

(10) Make sure that all fuel line joints are leakproof.

d. How to light the burner using gasoline. (see fig. 89). (1) Open the cover on the tent stove.

(2) Turn the center knob to 9 on the dial. When gasoline appears in the burner, turn the knob back to 1.

(3) Drop a lighted match into the burner immediately.

Caution: Keep your face and hands away from the opening.

(4) Replace the top cover, and after 5 minutes set the knob for the size of flame desired.

(5) The red arrow on the dial indicates the range of adjustment for gasoline. Any setting above 7 will cause smoke and waste of fuel.

e. How to light the burner using kerosene or fuel oil. (1) Open the cover on the tent stove.

(2) Set the center knob of control at 0.

(3) Turn the inlet knob to ON position.

(4) Turn the center knob to 9 on the dial. When the burner bottom is covered, turn the knob back to 1.

(5) Light a small wad of paper or oily rag and drop it into the burner.

(6) Replace the top cover; after 10 minutes set the knob for the size of flame desired.

f. How to turn off the burner. (1) Set the center knob at 0.

(2) Turn the inlet knob to the OFF position.

Important: The fuel cannot be shut off completely with the center knob. When this knob is set at 0, a pilot flow will be maintained. Therefore the inlet valve must be closed to stop the flow of fuel to the burner.

g. Maintenance. (1) Remove dirt and sediment from the bottom of the burner pot frequently.

(2) Examine the air holes in the side of the burner pot occasionally, to make sure that they are all open.

(3) From time to time remove the strainer screen just above the inlet connection of the control. Wash out accumulated dirt and foreign matter.

(4) See section XIII, appendix, for a list of parts for mechanical maintenance.

h. How to convert the stove for burning wood or coal. To convert the stove to a wood or coal burner, take down the stovepipe and the top section of the stove. Remove the burner; replace the cast-iron grate; and reassemble the stove.

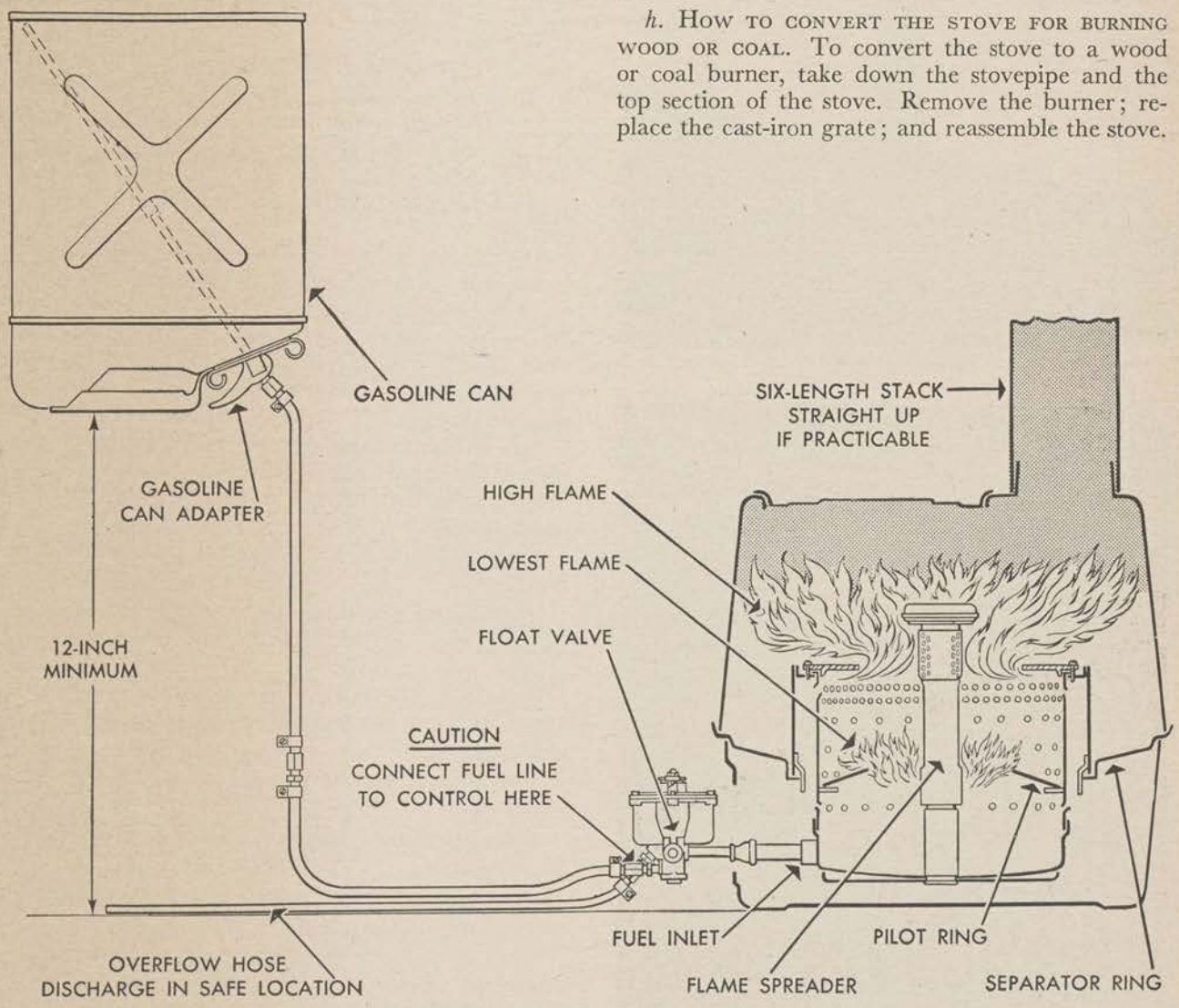

Figure 88. Burner, oil, stove, tent, M1941 (65–N–1375).

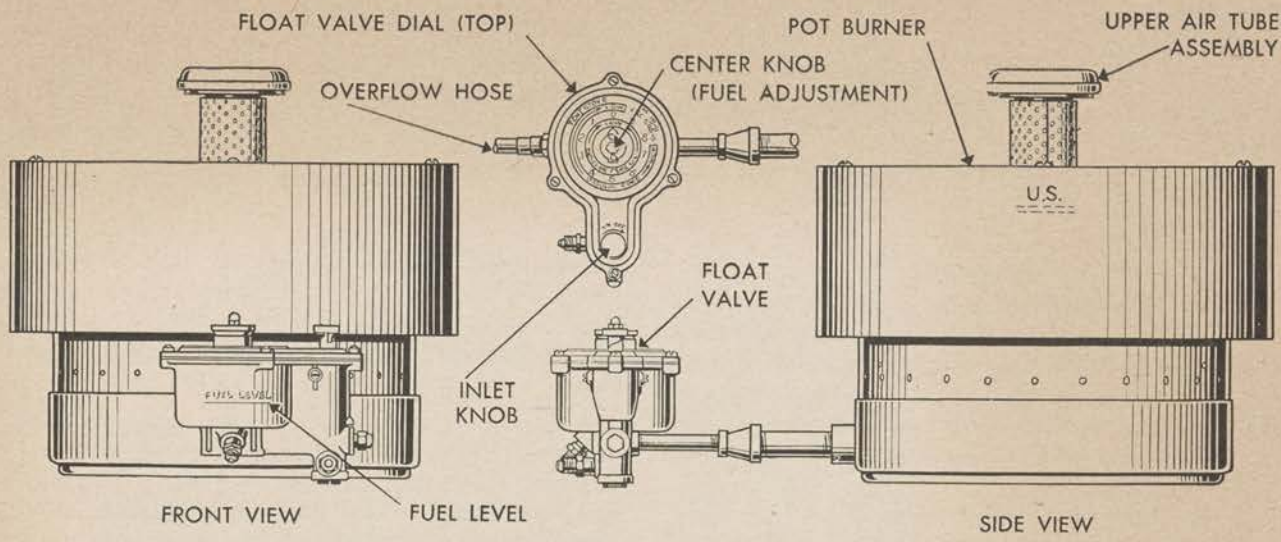

Figure 89. Detail of oil burner and float valve.

CHAPTER 6

DEMOLITION OF EQUIPMENT

73. Authority and Responsibility

a. On occasion it may be necessary to destroy the items of quartermaster equipment discussed in this manual in order to prevent their falling into the hands of an enemy. For this reason it is essential that personnel charged with operation of the equipment should be familiar with approved methods of demolition.

b. Decisions concerning demolition are command decisions and the responsibility of divisional or higher commanders. Such officers may delegate authority to lower echelons of command.

74. General Directions

a. Destruction must be as complete as available time, equipment, and personnel will permit. If thorough destruction of all parts cannot be accomplished, the most important parts of equipment must be destroyed. To make certain that time is not wasted, demolition should be planned in a definite sequence of operations, starting with destruction of the most vital parts of equipment.

b. The same essential parts must be destroyed on all like units of equipment to prevent the reconstruction of one complete unit by "cannibalization." For example, 100 percent effectiveness could not be attained by destroying the top section of one bake oven, M1942, and the bottom section of another.

c. There are three principal means for the demolition of equipment:

(1) Mechanical destruction.

(2) Explosives.

(3) Fire.

d. Equipment, particularly small units, may also be buried in the ground or sunk in deep water.

e. In general, the equipment discussed in this manual may best be destroyed by mechanical means, such as sledge hammers, axes, or other heavy tools. Some larger equipment may be blown up or burned. Gasoline or fuel oil may be used to saturate equipment prior to setting fire to it.

f. The possibility of setting booby traps in abandoned matériel should also be kept in mind. Instructions on this subject will be found in FM 5–30.

75. Directions for Demolition of Individual Items

a. GASOLINE COOKING STOVES AND COOKING OUTFITS. Destroy small gasoline cooking stoves by smashing them with an ax or any heavy tool. Cut up large utensils with an ax; bury such small items as forks and ladles, or throw them into deep water. Smash burners and fuel cans for the M1943 multifuel pack cooking outfit.

b. RANGE, FIELD, M1937. To destroy the fire unit, break off one of the burner arms, and smash the front panel, the generator, and the tanks. If no other tool is available, use the cleaver from the tool set. Destroy the cabinet by breaking off the hinges and by making several cuts in each side. Cut up or bury all utensils.

c. RANGES, ARMY FIELD, NOS. 1 AND 2. Destroy these small field ranges by smashing or cutting them with any convenient tool. Cut up or bury all utensils.

d. OVEN, FIELD, BAKE, M1942. The M1942 field bake oven is best destroyed by exploding a block of TNT in the proofing chamber. Place bread pans and other equipment in the baking chambers before the charge is exploded. If for any reason it is impossible to destroy the oven by explosives, smash the fire units and bury the oven or submerge it in deep water.

e. OVEN, BAKE, ARMY FIELD, NO. 1. The No. 1 field bake oven is likewise best destroyed by explosives. Place the Wynne burner or other firing unit in the lower chamber and load the upper chambers with utensils. Then place a 4-pound charge of TNT in the lower chamber and explode the charge. Be sure that the chamber door is securely fastened and reinforced. If the use of explosives is impossible, dismantle the oven and cut up the parts with an ax. Smash the fire unit and cut up or bury all tools and utensils.

f. STOVE, TENT, M1941. Smash the tent stove, oil burner, and fuel can with an ax or a sledge.

LIST OF PARTS

Section I. ALL MAINTENANCE PARTS FOR STOVES, COOKING, GASOLINE

Stock No.	Nomenclature
STOVE, COOKING, GASOLINE, M1942, 1-BURNER, (MODIFIED) STOCK No. 65–H–2881	
65–H–1416 . . .	Cup, leather, air-pump, stove, cooking, gasoline, M1942, 1-burner.
65–H–1542 . . .	Gasket, filler cap, stove, cooking, gasoline, M1942, 1-burner.
65–H–1570 . . .	Generator-assembly, stove, cooking, gasoline.
65–H–1997 . . .	Knob, valve, stove, cooking, gasoline.
65–H–2151–30	Packing, lever, stove, cooking, gasoline, M1942, 1-burner.
65–H–2152 . . .	Packing, valve stem, stove, cooking, gasoline.
65–H–3135 . . .	Tip, check valve, air-pump, stove, cooking, gasoline, M1942, 1-burner.
65–H–3836 . . .	Wrench, stove, cooking, gasoline, M1942, 1-burner.

Note. Lists of maintenance parts are subject to periodic revision to conform to current field experience.

Stock No.	Nomenclature
STOVE, COOKING, GASOLINE, M1941, 1-BURNER, STOCK No. 65–H–2880	
65–H–1415 . . .	Cup, leather, air-pump, stove, cooking, gasoline, M41, 1-burner, M42, 2-burner.
65–H–1540 . . .	Gasket, filler cap, stove, cooking, gasoline, M1941, 1-burner.
65–H–1760 . . .	Holder-assembly, complete w/parts.
65–H–1997 . . .	Knob, valve, stove, cooking, gasoline.
65–H–3835 . . .	Wrench, stove, cooking, gasoline, M1941, 1-burner and M1942, 2-burner.
STOVE, COOKING, GASOLINE, M1942, 2-BURNER, STOCK No. 65–H–2882	
65–H–1415 . . .	Cup, leather, air-pump, stove, cooking, gasoline, M41, 1-burner, M42, 2-burner.
65–H–1760 . . .	Holder-assembly, complete w/parts.
65–H–1997 . . .	Knob, valve, stove, cooking, gasoline.
65–H–3835 . . .	Wrench, stove, cooking, gasoline, M1941, 1-burner and M1942, 2-burner.

Section II. PARTS FOR MECHANICAL MAINTENANCE OF OUTFIT, COOKING, PACK (STOCK NO. 64-0-214)

Stock No.	Nomenclature
65–H–1002 . . .	Adapter, gravity feed, 5-gallon gasoline can.
43–B–23722 . . .	Bolt, stove, steel, NCTS, flathead, w/out nut, Class 1 fit, $\frac{3}{16}$″ x $\frac{3}{4}$″.
65–H–1240 . . .	Burner, downdraft, $3\frac{1}{4}$″ dia., w/out fittings.
33–H–470	Hose, gasoline, slip-on type.
65–H–2030 . . .	Manifold, fuel feed, range, field, outfit, cooking, pack, (with 2 valves, drip).
43–N–11398 . .	Nut, wing, steel, threaded, NCTS, $\frac{3}{16}$″.
65–H–2320–30	Pipe, stove, joint or section, tapered, 6″, nested.
41–S–5227	Stone, sharpening, pocket, $3\frac{1}{2}$″ x $1\frac{1}{4}$″ x $\frac{13}{16}$″.
65–H–3695 . . .	Valve, drip, burner, downdraft, plain outlet.
65–H–3715 . . .	Washer, adapter, gravity feed, 5-gallon gasoline can.
65–H–3825 . . .	Wrenches, Oil burner (3 to set).

Note. Lists of maintenance parts are subject to periodic revision to conform to current field experience.

Section III. PARTS FOR MECHANICAL MAINTENANCE OF OUTFIT, COOKING, SMALL DETACHMENT (STOCK NO. 64-0-270)

Stock No.	Nomenclature
65–H–1002	Adapter, gravity feed, 5-gallon gasoline can.
43–B–23722	Bolt, stove, steel, NCTS, flathead, w/out nut, Class I fit, 3/16" x 3/4".
65–H–1240	Burner, downdraft, 3¼" dia., w/out fittings.
33–H–470	Hose, gasoline, slip-on type.
43–N–11398	Nut, wing, steel, threaded, NCTS, 3/16".
65–H–2310	Pipe, stove, joint or section, tapered, 4½", nested.
41–S–5227	Stone, sharpening, pocket, 3½" x 1¼" x 13/16".
65–H–3696	Valve, drip, burner, downdraft, screw outlet.
65–H–3715	Washer, adapter, gravity feed, 5-gallon gasoline can
65–H–3825	Wrenches, oil burner (3 to set).

Note. Lists of maintenanee parts are subject to periodic revision to conform to current field experience.

Section IV. INITIAL ISSUES OF COMPONENT PARTS, EQUIPMENT, ACCESSORIES, UTENSILS, AND SPARE PARTS FOR RANGE, FIELD, M1937

Note. Mechanical maintenance parts are listed in section VI.

Stock No.	Nomenclature	Quantity per Set of Cabinets 1	2	3	4
	COMPONENT PARTS				
65–J–1330	Cabinets	1	2	3	4
65–J–1645	Cradles, cook-pot	1	2	3	4
65–J–2612	Units, fire, simplified converted type	1	2	3	4
	EQUIPMENT				
64–C–1221–50	Covers, cook-pot or insert	2	4	6	8
64–C–1223	Covers, roasting pan, 2" x 17⅝" x 21⅛" (Also used as a Griddle)	1	2	3	4
65–J–1865	Grates, wood-burning	1	2	3	4
64–I–680	Inserts, cook-pot, 10-gallon	1	2	3	4
64–P–275	Pans, bake and roasting, field range, M1937	1	2	3	4
64–P–511	Pans, cake, 1⅜" x 16" x 19½"	1	2	3	4
65–J–2137	Plates, splash	1	2	3	4
64–P–2100	Pots, cooks, heavy, 15-gallon	1	2	3	4
	ACCESSORIES				
65–J–1115	Book, instruction	1	1	1	1
65–J–1145	Boxes, tool, empty	1	1	1	1
65–J–1300	Brushes, steel wire	1	1	1	1
65–J–1470	Chains, tie-in, left	1	1	1	1
65–J–1475	Chains, tie-in, right	1	1	1	1
65–J–1565	Cleaners, slot, burner	1	1	1	1
65–J–1585	Container, tin, small parts (not issued for replacement)	1	1	1	1
65–J–1590	Container, tin, with graphite grease	1	1	1	1
58–E–202	Extinguisher, fire, carbontetrachloride, hand, 1-qt., with wall bracket	1	1	1	1
64–F–540	Funnels, with strainer, ½-qt.	1	1	1	1
70–H–1190	Hooks, hay hook ⅜", handle 5¼", length 8¼"	2	2	2	2
65–J–2142	Protectors, arm, long	1	2	3	4
65–J–2143	Protectors, arm, short	1	2	3	4
65–J–2160	Pumps, air pressure	1	1	1	1
65–J–2230	Reamers, fuel jet	1	1	1	1
41–S–1101	Screwdrivers, common, normal duty, single grip, length-of-blade 3"	1	1	1	1
65–J–2690–45	Wrench, open end, ⅝"	1	1	1	1
65–J–2693–20	Wrench, screw, cap, filter case	1	1	1	1
65–J–2696	Wrench, set screw, 5/16"	1	1	1	1
	UTENSILS				
64–B–436	Blades, saw, butchers', length (overall) 14 11/16", center to center of holes, 14"	1	1	1	1
64–C–725	Cleavers, butchers', blade 8"	1	1	1	1
64–D–200	Dippers, 1-quart	1	2	3	4
64–F–275	Forks, cook, flesh, length overall 15"	1	2	3	4
64–F–285	Forks, cook, flesh, length overall 21"	1	2	3	4
64–K–441	Kits, canvas, utensils	1	1	1	1
64–K–545	Knives, butchers', length of blade 10"	1	2	3	4
64–K–660	Knives, paring	2	4	6	8
64–L–160	Ladles, length overall 21"	1	2	3	4
64–M–115	Machines, chopping (grinding), meat and food, hand operated, small	1	1	1	1
64–O–130	Opener, can, hand	3	3	3	3
64–S–115	Saws, butcher's, 14" blade	1	1	1	1
64–S–790	Skimmers, length overall 15"	1	2	3	4
64–S–1000	Spoons, basting, length overall 15"	1	2	3	4
64–S–1010	Spoons, basting, length overall 21"	1	2	3	4
64–S–1220	Steels, butchers', length of blade 10"	1	1	1	1
41–S–5274	Stones, sharpening, mounted, medium grit, size 1" x 2" x 6"	1	1	1	1
64–T–579	Turners, cake, length overall 15"	1	2	3	4
	or				
64–T–584	Turners, cake, length overall 21"	1	2	3	4
64–W–205	Whip, egg, 16"	1	1	1	1
	SPARE PARTS				
65–J–1655	Cups, leather, air pump	2	2	2	2
65–J–1943	Hose, pump, air-pressure, complete	1	1	1	1
65–J–1962	Jet, fuel, flame valve	4	4	4	4
65–J–1964	Jet, metering, mixture-valve	2	2	2	2
65–J–2015	Knobs, valve-stem, with cotter pin, air	2	2	2	2
65–J–2021	Knobs, valve-stem, with cotter pin, flame	2	2	2	2
65–J–2025	Knobs, valve-stem, with cotter pin, fuel	2	2	2	2
65–J–2085	Packing, valve-stem	8	8	8	8
65–J–2487	Stem, valve flame	2	2	2	2
65–J–2538	Tube, fuel, converted type	4	4	4	4
65–J–2546	Tubes, fuel on air, long	4	4	4	4
65–J–2560	Tubes, manifold	4	4	4	4
65–J–2652	Valve, flame	2	2	2	2
65–J–2680	Valve, mixture	1	1	1	1

Note. See section VI for a list of parts for mechanical maintenance.

Stock No.	Part No.	Nomenclature
65–J–1101....	90	Bolt, stove, round head, 3/16" x 1" with nut and locker washer, tank anchor strap.
65–J–1145....	181	Box, tool, empty.
65–J–1300....	213	Brush, steel, wire.
65–J–1310....	145	Burner, fire-unit.
65–J–1407....	102	Cap, filler-tube, fuel-tank, with plug.
65–J–1430....	*151	Cap, generator tube*.
65–J–1490....	144	Chamber, mixing.
65–J–1470....	216	Chain, tie-in, left.
65–J–1475....	215	Chain, tie-in, right.
65–J–1510....	122	Check, valve, air-input.
65–J–1515....	107	Check, valve, fuel-output.
65–J–1545....	**260	Cleaner, front generator tube, converted type**.
65–J–1565....	211	Cleaner, slot, burner.
65–J–1555....	*212	Cleaner, generator*.
65–J–1590 ...	218	Container, tin, with-graphite-grease.
64–C–1223...	230	Covers, roasting pan, 2" x 17 5/8" x 21 1/8".
64–C–1221–50	223	Cover, cook pot or insert.
65–J–1645....	159	Cradle, cook pot.
65–J–1655....	197	Cup, leather, air pump.
64–D–200....	241	Dipper, 1-quart.
65–J–1667....	*153	Discs, filter (50 per can) (Unit each)*.
65–J–1730....	110	Elbow, air output.
65–J–1740....	126	Elbow, gauge, air.
58–E–202....	***239	Extinguisher, fire, carbontetrachloride, hand 1-qt. with wall bracket.
64–F–540....	214	Funnel, with-strainer, 1/2-quart.
65–J–1830....	127	Gauge, air-pressure.
65–J–1845....	*156	Gasket, filter case cap screw.*
65–J–1855 ...	*148	Generator, fire-unit.*
65–J–1857....	**257	Generator, fire-unit, converted type**.
65–J–1860....	131	Gland, packing valve, air, fuel or flame.
65–J–1864....	127B	Glass, gauge, air pressure.
65–J–1865....	160	Grate, wood burning.
70–H–1190...	233	Hooks, hay hook 3/8", handle 5 1/4", length 8 1/4".
65–J–1843....	202	Hose, pump, air pressure, complete.
64–I–680.....	225	Inserts, cook pot, 10-gallon.
65–J–1962....	264	Jet, fuel, flame valve.
65–J–1964....	**262	Jet, metering, mixture valve.
65–J–2015....	133	Knob, valve-stem, with cotter pin, air.
65–J–2021....	135	Knob, valve-stem, with cotter pin, flame.
65–J–2025....	134	Knob, valve-stem, with cotter pin, fuel.
65–J–2073....	95	Mirror, panel, fire unit, front.
65–J–2065....	60	Latch, shutter, cabinet, door, front, upper.
65–J–2077....	147	Nut, burner.
65–J–2079....	141	Nut, valve, flame.
65–J–2085....	132	Packing, valve-stem.
64–P–275....	227	Pan, bake and roasting, field range, M1937.
64–P–511....	231	Pan, cake, 1 3/8" x 16" x 19 1/2".
65–J–2100....	93	Panel, fire-unit, front, (w/hinge with 4 rivets, steel, flathead, part No. 93B).
65–J–2120....	136	Pin, cotter, bevel point, 3/32" x 1" (component of part Nos. 133, 134 and 135).
65–J–2123....	157B	Pin, cotter, bevel point, 3/32" x 1 1/4" (component of part No. 157).
65–J–2137....	224	Plate, splash.
64–P–2100...	222	Pot, cook, heavy, 15-gal.
65–J–2160....	190	Pump, air-pressure.
65–J–2142....	220	Protector, arm, long.
65–J–2143....	221	Protector, arm, short.
55–J–2230....	210	Reamer, fuel-jet.
65–J–2245....	123	Retainer, valve-check, air-input.
65–J–2290....	88B or 89B	Rivet, steel, round head, 3/16" x 3/8".
65–J–2300....	146	Rod, burner-control.
65–J–2335....	144B	Screw, machine, steel, round-head, NCTS, 1/4" x 1/2".
41–S–1101....	209	Screwdriver, common, normal duty, single grip, length of blade 3".
65–J–2330....	*155	Screw, cap, filter-case, generator*.
65–J–2370....	158	Screw, set, steel, hanger-point, NCTS, 5/16" x 3/4".
65–J–2345....	96 or 101	Screw, self-tapping, round-head, 1/4", No. 10.
65–J–2352....	98	Screw, set, steel, cup-point, 5/16" x 5/8".
65–J–2393....	**259	Shield, starting, converted type**.
65–J–2405....	142	Shutter, air.
65–J–2482....	130	Stem, valve, air or fuel.
65–J–2484....	121	Stem, valve, air-input.
65–J–2487....	265	Stem, valve, flame.
65–J–2494....	89	Strap, anchor, fire unit tank, inner (with rivet, steel, roundhead, part No. 89B).
65–J–2495....	88	Strap, anchor, fire unit tank, outer (with rivet, steel, roundhead, part No. 88B).
65–J–2498....	108	Tank, air.
65–J–2500....	99	Tank, fuel.
65–J–2546....	118	Tube, fuel or air, long.
65–J–2538....	**266	Tube, fuel, converted type**.
65–J–2540....	*117	Tube, short.
65–J–2560....	116	Tube, manifold.
65–J–2580....	106	Tube, uptake, fuel output valve.
65–J–2612....	.....	Unit, fire, simplified converted type.
65–J–2625....	128	Valve, air or fuel, without knob.
65–J–2635....	119	Valve, air-input.
65–J–2652....	263	Valve, flame.
65–J–2675....	104	Valve, fuel-output.
65–J–2680....	**261	Valve, mixture.
65–J–2690–45.	206	Wrenches, open-end, 5/8".
65–J–2693–20.	205A	Wrenches, screw, cap, filter case.
65–J–2696....	208	Wrenches, set-screw, 5/16".
65–J–2700....	157	Yoke, generator, fire unit.

NOTES

Asterisk (*) opposite part number indicates part *not required* for maintenance of fire units which have been modified with conversion set No. 2 (simplified), that is, Units, Fire, M1937, converted type (Stock No. 65–J–2612).

Two asterisks (**) opposite part number indicates part *required only* for maintenance of fire units which have been modified with conversion set No. 2 (simplified), that is, Units, Fire, M1937, converted type (Stock No. 65–J–2612).

Three asterisks (***) opposite part number indicates part should be requisitioned on the Corps of Engineers.

Section VI. PARTS FOR MECHANICAL MAINTENANCE OF RANGE, FIELD, M1937 (STOCK NO. 65–J–2225); HEATER, WATER, RANGE, FIELD, M1937 (STOCK NO. 65–J–1912); HEATER, IMMERSION TYPE FOR CORRUGATED CAN (STOCK NO. 65–J–1911–50); CONVERSION SET NO. 2 (SIMPLIFIED) FOR UNIT, FIRE, M1937 (STOCK NO. 65–J–2377).

Stock No.	Part No.	Nomenclature
		PARTS FOR UNIT, FIRE, M1937 (STOCK No. 65–J–2605)
65–J–1101....	90	Bolt, stove, roundhead, 3/16" x 1", w/nut and lockwasher (for tank anchor strap).
65–J–1310....	145	Burner, fire unit.
65–J–1407....	102	Cap, filler tube, fuel tank, w/plug.
65–J–1430....	*151	Cap, generator tube.
65–J–1490....	144	Chamber, mixing.
65–J–1510....	122	Check, valve, air input.
65–J–1515....	107	Check, valve, fuel output.
65–J–1667....	*153	Disc, filter (50 per can) (unit ea.).
65–J–1730....	110	Elbow, air output.
65–J–1740....	126	Elbow, gauge, air.
65–J–1830....	127	Gauge, air pressure.
65–J–1845....	*156	Gasket, filter case cap screw.
65–J–1855....	*148	Generator, fire unit.
65–J–1860....	131	Gland, packing, valve, air, fuel or flame.
65–J–1864....	127B	Glass, gauge, air pressure.
65–J–1960....	*140	Jet, fuel.
65–J–2015....	133	Knob, valve stem, with cotter pin, air.
65–J–2021....	135	Knob, valve stem, with cotter pin, flame.
65–J–2025....	134	Knob, valve stem, with cotter pin, fuel.
65–J–2073....	95	Mirror, panel, fire unit, front.
65–J–2077....	147	Nut, burner.
65–J–2079....	141	Nut, valve, flame.
65–J–2085....	132	Packing, valve stem.
65–J–2100....	93	Panel, fire unit front.
65–J–2120....	136	Pin, cotter, bevel point, 3/32" x 1".
65–J–2123....	157B	Pin, cotter, bevel point, 3/32" x 1 1/4".
65–J–2245....	123	Retainer, valve, check, air-input.
65–J–2300....	146	Rod, burner, control.
65–J–2335....	144B	Screw, mach., steel, round-head N.C.T.S., 1/4" x 1/2".
65–J–2330....	*155	Screw, cap, filter case, generator.
65–J–2370....	158	Screw, set, steel, hanger point, N.C.T.S., 5/16" x 3/4".
65–J–2345....	96 or 101	Screw, self-tapping, round-head 1/4" No. 10.
65–J–2352....	98	Screw, set, steel, cup point, 5/16" x 5/8".
65–J–2405....	142	Shutter, air.
65–J–2484....	121	Stem, valve, air input.
65–J–2482....	130	Stem, valve, air or fuel.
65–J–2486....	*139	Stem, valve, flame.
65–J–2494....	89	Strap, anchor, fire unit tank, inner.
65–J–2495....	88	Strap, anchor, fire unit tank, outer.
65–J–2498....	108	Tank, air.
65–J–2500....	99	Tank, fuel.
65–J–2546....	118	Tube, fuel or air, long.
65–J–2540....	*117	Tube, fuel, short.
65–J–2560....	116	Tube, manifold.
65–J–2605....	84	Unit, fire.
65–J–2625....	128	Valve, fuel or air, w/out knob.
65–J–2635....	119	Valve, air input.
65–J–2655....	*137	Valve, flame, w/out knob.
65–J–2675....	104	Valve, fuel output.
65–J–2700....	157	Yoke, generator, fire unit.

Stock No.	Part No.	Nomenclature
		TOOLS AND ACCESSORIES FOR UNIT, FIRE, M1937
65–J–1145....	181	Box, tool, empty.
65–J–1300....	213	Brush, steel wire.
65–J–1565....	211	Cleaner, slot, burner.
65–J–1555....	*212	Cleaner, generator.
65–J–1655....	197	Cup, leather, air pump.
58–E–202....	239	Extinguisher, fire carbontetrachloride, 1-qt., pump type.
65–F–540....	214	Funnel, w/strainer, 1/2-qt.
65–J–1943....	202	Hose, pump, air pressure, complete.
65–J–2160....	190	Pump, air pressure.
65–J–2230....	210	Reamer, fuel jet.
41–S–1101....	209	Screw driver, common, normal duty single grip, 3" blade.
65–J–2693....	205	Wrench, screw, cap, filter case.
65–J–2690–45.	206	Wrench, open end, 5/8".
65–J–2696....	208	Wrench, set screw, 5/16".
65–J–1115....	.....	Book, instruction.

Note. Asterik (*) opposite part number indicates part not required for maintenance of fire units which have been modified with conversion set No. 2 (simplified).

		ADDITIONAL PARTS, TOOLS AND ACCESSORIES REQUIRED FOR MAINTENANCE OF FIRE UNITS MODIFIED WITH CONVERSION SET No. 2 (SIMPLIFIED) STOCK No. 65–J–2377
65–J–1545....	260	Cleaner, front generator tube.
65–J–1857....	257	Generator, fire unit, (conversion set No. 2).
65–J–1964....	262	Jet, metering, mixture valve.
65–J–1962....	264	Jet, fuel, flame valve.
65–J–2393....	259	Shield, starting.
65–J–2487....	265	Stem, valve, flame.
65–J–2488....	.....	Stem, valve, mixture.
65–J–2538....	266	Tube, fuel.
65–J–2652....	263	Valve, flame.
65–J–2680....	261	Valve, mixture.
		PARTS AND ACCESSORIES FOR CABINET, RANGE, FIELD, M1937
65–J–1330....	1	Cabinet.
65–J–1590....	218	Containers, tin w/graphite grease.
65–J–1470....	216	Chain, tie-in, left.
65–J–1475....	215	Chain, tie-in, right.
65–J–1645....	159	Cradle, cook pot.
65–J–1865....	160	Grate, wood burning.
65–J–2065....	60	Latch, shutter, cabinet.
65–J–2142....	220	Protector, arm, long.
65–J–2143....	221	Protector, arm, short.
		UTENSILS FOR RANGE, FIELD, M1937
64–C–1221–50	223	Cover, cook pot or insert.
64–C–1223...	230	Cover, roasting pan, 21 1/8" x 17 5/8" x 2" (also used as a griddle).
64–D–200....	241	Dipper, 1-quart.
70–H–1190...	233	Hook, hay (Hook 3/8", handle 5 1/4", length 8 1/4").
64–I–680.....	225	Insert, cook pot, 10-gallon.
64–P–275.....	227	Pan, bake and roasting.
64–P–511.....	231	Pan, cake.
65–J–2137....	224	Plates, splash.
64–P–2100...	222	Pot, cook, heavy, 15-gal.

Stock No.	Part No.	Nomenclature
PARTS, ACCESSORIES AND UTENSILS FOR HEATER, WATER, RANGE, FIELD, M1937, STOCK No. 65–J–1912		
Note. Fire unit parts not included. See preceding list for fire unit maintenance items.		
42–C–1780	170	Can, corrugated, nesting, galv. 24-gal. without cover.
65–J–1450	169	Case, water heater.
42–C–22470	171	Cover, can, corrugated galv. 24-gal.
65–J–2390	172	Shield, case, water heater.
PARTS FOR HEATER, IMMERSION TYPE, FOR CORRUGATED CAN (STOCK No. 65–J–1911–50)		
43–B–23862	.....	Bolt, stove, steel, NCTS, oval countersunk head, w/out nut Class I fit, 3/16" x 3/4".
65–J–1312–30	.....	Burner-assembly, heater, immersion, can, corr.
65–J–1847–30	.....	Gate, draft, heater, immersion, can, corr.
65–J–2066–30	.....	Lifter, draft gate, heater, immersion, can, corr.
65–J–2066–50	.....	Lighter, burner, heater, immersion, can, corr.
43–N–11398	.....	Nut, wing, steel, threaded, NCTS, 3/16".
43–N–11402	.....	Nut, wing, steel, threaded, NCTS, 5/16" (for fuel tank clamp).
65–H–2272	.....	Pipe, stove, joint or section, straight, 4".
65–J–2139–30	.....	Plug, filler, heater, immersion, can, corr.
43–S–19558	.....	Screw, thumb, steel, threaded NCTS, 3/8" x 2".
65–J–2510	.....	Tank, fuel, heater, immersion, can, corr.
65–J–2676–30	.....	Valve, gasoline, heater, immersion, can, corr.

Note. Lists of maintenance parts are subject to periodic revision to conform to current field experience.

Section VII. RANGE, ARMY FIELD, NO. 1, COMPLETE WITH EQUIPMENT STOCK NO. 65–B–1090; RANGE ONLY 65–B–1095

Stock No.	Nomenclature	Quantity
	Attachments Alamo:	
65–B–1010	Part No. 42-A	1
65–B–1015	Part No. 42-B	1
65–B–1025	Body, part No. 41	1
65–B–1035	Guard, tent	1 pr.
65–B–1040	Pipes, elbow; part No. 47	1
	Pipes, joint:	
65–B–1045	Part No. 43	1
65–B–1050	Part No. 44	1
65–B–1055	Part No. 45	1
65–B–1060	Part No. 46	1
65–B–1070	Plate, boiling; part No. 42	1
65–B–1115	Rests, pan; part No. 57	2
	UTENSILS	
64–B–379	Blades, meat and food chopper, hand operated	3
	Boilers, range, Army field, with cover:	
64–B–1065	Part No. 48	1
64–B–1066	Part No. 49	1
64–B–1067	Part No. 50	1
64–B–1068	Part No. 51	1
64–B–1069	Part No. 53	1
64–B–1070	Part No. 54	1
64–C–725	Cleaver, butcher's, 7" blade	1
64–D–200	Dipper, 1-qt	1
64–D–210	Dipper, 2-qt	1
64–F–275	Forks, cook, flesh, 15"	2
64–K–545	Knives, butcher, 10" blade	3
64–M–115	Machine, hand operated, chopper (or grinder) w/o fly wheel, meat and food, small	1
64–P–386	Pans, bake and roasting, 4½" x 15½" x 17½"; part No. 52, bottom	2
64–S–115	Saw, butchers', 14" blade	1
64–S–790	Skimmer, 15" overall	1
64–S–1000	Spoons, basting, length 15"	2
64–S–1220	Steel, butcher, length 10"	1

Section VIII. RANGE, ARMY FIELD, NO. 2, COMPLETE WITH EQUIPMENT STOCK NO. 65–C–1065; RANGE ONLY 65–C–1070

Stock No.	Nomenclature	Quantity
65–C–1010	Body, part No. 61	1
65–B–1035	Guard, tent	1 pr.
65–C–1015	Pipe, elbow; part No. 67	1
	Pipes, joint:	
65–C–1020	Part No. 63	1
65–C–1025	Part No. 64	1
65–C–1030	Part No. 65	1
65–C–1035	Part No. 66	1
65–C–1050	Plate, boiling; part No. 62	1
65–B–1115	Rests, pan; part No. 57	2
	UTENSILS	
	Boilers, range, Army Field, with covers:	
64–B–1067	Part No. 50	1
64–B–1068	Part No. 51	1
65–D–210	Dipper, 2-qt	1
64–F–275	Forks, cook, flesh, 15"	2
64–K–545	Knives, butcher, 10" blade	2
64–P–386	Pans, bake and roasting—4½" x 15½" x 17½"; part No. 52, bottom	2
64–S–115	Saw, butchers', 14" blade	1
64–S–790	Skimmer, 15" overall	1
64–S–958	Spoons, basting, length 13½"	2
64–S–1220	Steel, butcher, size 10"	1

Section IX. COMPONENTS AND ACCESSORIES FOR OUTFIT BAKING, FIELD, M1942, STOCK NO. 65–A–5000

Stock No.	Nomenclature	Basis of issue per section
	COMPONENTS	
65–J–1135	Box, tool, complete for range, field (M1937) (see list No. 1)	1
58–E–202	Extinguisher, fire, carbontetrachloride, 1-qt. pump type	1
65–A–5500	Oven, bake, field (M1942)	2
	Parts, spare, for unit fire (additional)	
65–J–1667	Disks, filter, (50 per can)	350
65–J–1845	Gaskets, filter case, cap screw	48
65–J–1855	Generator, fire unit	2
65–J–1860	Gland, packing valve, air fuel flame	12
14–G–918	Grease, lubricating, graphite (cup grease) medium, 3-lb. can	1
14–C–250	Compound, valve-grinding, fine, lb. can	1
65–J–1943	Hose, pump, air, pressure, complete	2
65–J–2085	Packing, stem valve	4
34–S–440	Skin, chamois, small	1
41–P–1650	Pliers, comb., slip joint (wire cutting type) 6″	1
18–T–1362	Thermometer, field bake oven (M1942)	1
65–J–2605	Unit, fire, for range, field (M1937)	6
41–W–485	Wrench, adjustable, crescent type, 6″	1

Stock No.	Nomenclature	Issue per issue per section
	ACCESSORIES	
38–B–835	Brush, bench, AFBO No. 1	1
38–B–1750	Brush, grease, AFBO No. 1	1
64–B–1810	Bucket, flour, 40-lb. capacity (Howard unit)	1
64–B–1850	Bucket, liquid, graduated, 4-gal. (Howard unit)	1
31–M–500	Mantle, gasoline, lantern	30
64–M–274	Measure, tin lipped, 2-qt.	1
64–M–276	Measure, tin lipped, 4-qt. galv.	1
42–N–25808	Nails, common, wire, 6D	10
42–N–25812	Nails, common, wire 8D	5
42–N–25816	Nails, common, wire 10D	5
42–N–25822	Nails, common, wire 20D	5
64–P–324	Pans, bake and roasting, 3″ x 12″ x 24″ AFBO No. 1	40
18–S–1085	Scale, weighing, baker's, dough 6 lbs.	1
18–S–1110–5	Scale, weighing, counter, scoop 10 lbs.	1
64–S–257	Scoop, flour or sugar, tinned, size of bowl, 6¾″ x 8¼″	1
64–S–745	Sieve, wood, 18″	1
64–S–365	Scraper, dough, 6″	2
18–T–1335	Thermometer, dough testing	1

Section X. PARTS FOR MECHANICAL MAINTENANCE OF OUTFIT, BAKING, FIELD, M1942 (STOCK NO. 65–A–5000), CONSISTING OF TWO OVENS, BAKE, FIELD, M1942 (STOCK NO. 65–A–5500) WITH EQUIPMENT AND ACCESSORIES*

Stock No.	Nomenclature
65–A–1205	Hood, oven, bake, field, M1942.
18–T–1362	Thermometer, oven, bake, field, M1942.
	TOOLS
41–P–1650	Pliers, 6″ comb., slip joint (Wire cutting type).
41–W–1660	Wrench, adjustable, crescent type, 6″.

(Carbon tetrachloride in fire extinguisher should be replenished periodically.)

*For mechanical maintenance of unit, fire, see section VI.

Note. Lists of maintenance parts are subject to periodic revision to conform to current field experience.

Section XI. PARTS FOR MECHANICAL MAINTENANCE OF OUTFIT, BURNER, POT TYPE, OVEN, BAKE, FIELD, M1942 (STOCK NO. 65–A–5040)

Stock No.	Nomenclature
65–H–1002	Adapter, gravity feed, 5-gallon, gasoline can.
65–A–4885	Block, clamp, burner, pot type, oven, bake, field, M1942.
65–A–4910	Burner, pot type, oven, bake, field, M1942 (w/float valve, instruction plate and 2 clamp blocks).
65–A–4930	Cap, rear stack, connection.
65–A–4940	Cradle, 5-gallon gasoline can.
17–G–1460	Gasket, spark plug, 7/8".
33–H–468	Hose, gasoline, screw type.
65–H–2283	Pipe, stove, joint or section, straight, 6", nested.
65–A–5600	Plug, asbestos, lighter.
65–A–5700	Swivel, burner, pot type, oven, bake, field, M1942.
65–A–5800	Torchlighter.
65–A–5875	Valve, float, burner, pot type, oven, bake, field, M1942.
65–H–3715	Washer, adapter, gravity, feed, 5-gallon gasoline can.
65–A–5900	Wrenches, burner, pot type, oven, bake, field, M1942 (set).

Section XII. OVEN, BAKE, ARMY FIELD, NO. 1 COMPLETE WITH COMPONENT PARTS, EQUIPMENT, ACCESSORIES, AND SPARE PARTS, STOCK NO. 65–A–1235 (OVEN ONLY, STOCK NO. 65–A–1240)

Stock No.	Nomenclature	Quantity
	COMPONENTS	
65–A–1010	Backs, part No. 2-A	1
65–A–1015	Bars, grate, single	27
65–A–1080	Chains and clamps, complete, sets	4
	Chambers:	
65–A–1090	A—Part No. 10-A	1
65–A–1095	B—Part No. 11-A	1
65–A–1100	C—Part No. 12-A	1
65–A–1125	Covers, canvas, Part No. 13-A	1
65–A–1130	Covers, trench, Part No. 5-A	1
	Doors, chamber:	
65–A–1160	Part No 10-A	1
65–A–1165	Part No. 11-A	1
65–A–1170	Part No. 12-A	1
65–A–1180	Fronts, Part No. 1-A	1
65–A–1210	Hooks, pan, 5-foot	1
65–A–1250	Pipes, elbow, hooded, Part No. 9-A	1
65–A–1285	Pipes, lower, Part No. 7-A	1
65–A–1290	Pipes, upper, Part No. 8-A	1
65–A–1325	Rods, bracing, smoke-stack	2
65–A–1328	Scraper and rake, bake oven, Army, field, No. 1, combination, fire	1
	Sides:	
65–A–1330	Left, Part No. 3-A	1
65–A–1335	Right, Part No. 4-A	1
18–T–1360	Thermometers, field bake oven	1
65–A–1340	Tops, Part No. 6-A	1
	EQUIPMENT	
64–B–655	Boards, AFB oven No. 1—dam, dough trough	2
38–B–835	Brushes, bench, AFB oven, No. 1	1
38–B–1750	Brushes, grease, AFB oven, No. 1	1
64–C–208*	Cans, fermentation, dough, insulated	4
18–C–960	Clocks, alarm	1
64–C–870	Colanders, retinned, seamless, 6¼" x 16½"	1
64–C–1216	Covers, AFB oven, No. 1, canvas, breadrack No. 17-A	3
64–C–1218	Covers, AFB oven, No. 1, canvas, dough-trough, No. 14-A	2
64–C–1219**	Covers, AFB oven, No. 1, canvas, sponge-can, M1938	6
64–C–1220**	Covers, AFB oven, No. 1, sponge-can, No. 19-A	1
64–F–511	Funnels, tin, 1-quart	1
64–M–243	Measures, AFB oven, No. 1, aluminum, capacity 4 quarts	1
64–P–324	Pans, bake and roasting, 3" x 12" x 24" (12-ration)	36
64–R–119	Racks, AFB oven, No. 1, bread, folding, No. 16-A	3
18–S–1085	Scales, weighing, bakers', dough (AFBO No. 1) capacity 6 lbs	1
64–S–257	Scoops, flour or sugar, retinned, size of bowl 6¾" x 8¼"	1
65–S–365	Scrapers, dough, 6", AFB oven, No. 1	2
64–S–745	Sieves, wood, 18"	1
64–T–164	Tables, molding, with legs, AFBO No. 1	1
18–T–1335	Thermometers, dough-testing	1
64–T–511	Troughs, dough	2
18–W–660	Weights, bakers' scale (AFBO): 1-pound	1
18–W–665	2-pound	2

Stock No.	Nomenclature	Quantity
	ACCESSORIES	
	Boxes, supply (any suitable packing box may be used for this purpose)	
65–A–1020***	Burners, bake oven, Army, field, No. 1, complete, less-tank	1
65–A–1058	Burners, bake oven, Army, field, No. 1, with control valves only	1
65–A–1115	Couplings, feed-line (for burner)	2
65–A–1175	Feed-lines (for burner)	1
65–A–1190	Gages, air (for burner)	1
41–H–1632	Hatchets, claw, width of cutting edge 4″	1
31–L–410	Lanterns, gasoline, two-mantle, commercial	2
	Nails, wire, steel, bright common:	
42–N–25808	6D, 2″ long, lbs	5
42–N–25812	8D, 2½″ long, lbs	10
42–N–25816	10D, 3″ long, lbs	5
42–N–25822	20D, 4″ long, lbs	5
33–P–3752	Packing, asbestos rope, ⅜″ (for AFB oven No. 1) lbs	20
65–A–1255	Pipes, feed (for burner)	1
65–A–1300	Pumps, air (for burner)	1
41–S–3220	Shovels, general-purpose, long-handled, strap back, round point, No. 2	1
51–S–1980	Soda, caustic (lye), 13-oz. can	10
51–S–1644	Soap, laundry, ordinary issue, lbs	20
41–W–1652	Wrenches, pipe	1
41–W–2342	Wrenches, screw, monkey, knife-handle, jaw-opening (minimum) 1¾″, length 10″	1
	SPARE PARTS	
65–A–1075	Chains, oven-clamp	4
65–A–1110	Clamps	16
65–A–1150	Dampers, pipe, oven	1
41–H–1235	Handles, hatchet, claw, length 14″	1

* Cans, sponge, No. 18–A, AFBO No. 1, will be issued until exhausted and cans, fermentation, dough, insulated, will be issued in lieu thereof.
** These items are issued with cans, sponge No. 18–A, AFBC No. 1.
*** This item will be issued only upon requisition.

Section XIII. PARTS FOR MECHANICAL MAINTENANCE OF BURNER, OIL, STOVE, TENT, M1941 (STOCK NO. 65–N–1375)

Stock No.	Nomenclature
65–H–1002	Adapter, gravity feed, 5-gallon gasoline can.
65–H–1253	Burner, oil, pot type, with flame spreader and locking clips.
33–H–468	Hose, gasoline screw type.
65–N–3500	Valve, float, metering, burner, oil stove, tent, M1941.
65–H–3715	Washer, adapter, gravity feed, 5-gallon gasoline can.
65–H–3825	Wrenches, burner, oil (3 to set).

Note. Lists of maintenance parts are subject to periodic revision to conform to current field experience.

☆ U. S. GOVERNMENT PRINTING OFFICE: 1944—613574

INDEX

	Paragraph	Page
Burners (oil):		
Bake ovens	60	76
Conversion to wood or coal	72*h*	88
Improvised (oil and water burner)	61	77
Using kerosene or fuel oil	72*e*	88
Cabinets, care and maintenance	35	40
Canned heat	29*c*	28
Cans, corrugated	39	52, 53
Cars, kitchen, railway:		
Installation and use, M1937 range	34	39
Conversion sets:		
Fire units	37	47–52
Maintenance	37*h*	51
Convoys, motor, installation and use in M1937 range	33	39
Cooking vessels, care and maintenance	35	40
Demolition of equipment:		
Authority and responsibility	73	89
General directions	74	84
Stoves	75	89
Expedients, stove	29	28
Fires, accidental	37*g*	51
Fire units:		
Dismantling	37*c*	47
Extinguishing	37*f*	51
Lighting	37*e*	51
Heaters:		
Immersion type (24 gal.)	39	52
Water, use with range, M1937	38	52
Outfits:		
Burner, pot type	55, 56	67–72
Cooking—		
Assembling instructions	23	23, 24
Cavalry, pack	26	26
Component parts	22	22
Maintenance	24*b*	25
Mountain artillery	27	26–28
One burner	13	12
Operation	24*a*	24, 25
Packing instructions	25	25
Philippine scouts	28	28
Transportation	20	20
Two burner	14	13
Small detachments	21	21
20-man	15	13
Oil burner, assembling and operation	72	86
Ovens:		
Adapting M1937 range for use as	32	36–39
Bake—		
Army field, No. 1—		
Assembling	59	73–76
General	57	73
Parts	58	73
M1942—		
Assembling	52	65
Description	52	65
Firing	54	65
Dismantling for storage or transportation	63	77
Ovens—Continued	Paragraph	Page
Firing with wood	62	77
Improvised—		
Barrel	66	78
General	64	78
Earth	65	78
Oil drum	67	80
Sod	68	81
Miscellaneous	69	83
Ranges:		
Army field, No. 1—		
Assembling for transportation	44	61
Care and maintenance	45	61
Installation	41	55
Operation	42	56–58
Use on troop trains	45	61
Wood burning	40	55
Army field, No. 2—		
Assembling for transportation	50	63
Care and maintenance	49	63
Description	46	63
Installation	47	63
Operation	48	63
Use on troop trains	51	63
Field, M1937—		
Adapting for use as an oven	32	36–38
Baking	31*e*	35
Boiling	31*a*	34
Description	30	31
Frying	31*c*	35
Griddle cooking	31*d*	35
Operation	31	34
Roasting	31*b*	35
Water heater	38	52
Stoves:		
Gasoline Cooking—		
M1941—		
One-burner—		
General	6	8
Hints and precautions	9	11
Lighting and operating instructions	7	9
Repair instructions	8	9–11
M1942—		
Modified type	5	6–8
One-burner—		
General	1	1
Hints and precautions	4	3–6
Lighting and operating instructions	2	1
Maintenance	2	2, 3
Two-burner—		
General	10	12
Maintenance	12	12
Precautions	11	12
Tent M1941	70, 71	84–86
Troop trains—		
Installation of Army field ranges—		
No. 1	45	61
No. 2	51	63
Units:		
Fire—		
M1937	36, 54	40, 66

NTSU LIBRARY

1945 mocat p 335

