Set up a rain barrel

Use roof runoff for permitted outdoor jobs. Keep your drinking water supply on a separate system.

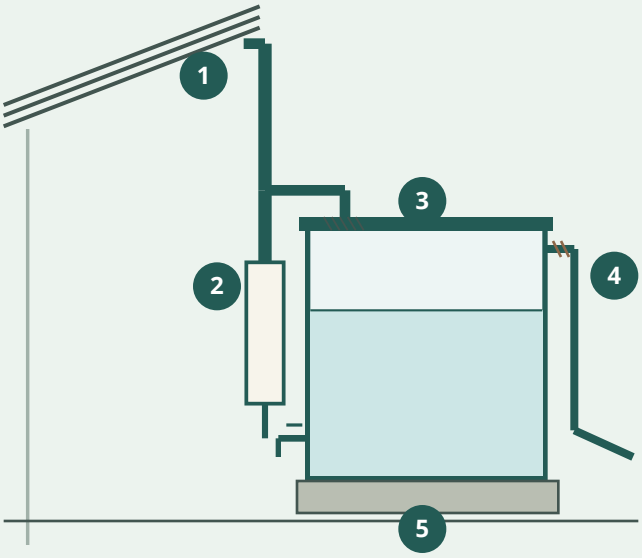

1. Gutter and downspout
Clear leaves and fit a screen.

2. First-flush diverter
The first dirty runoff fills the chamber. Later flow goes to the barrel.

3. Covered barrel
Screen the inlet, secure the lid and label the barrel for outdoor use.

4. Screened overflow
Route excess water away from the foundation.

5. Base and spigot
Set the barrel on a level, load-rated base. Leave room to fill a can.

How much will your roof catch?

Measure the horizontal area that drains to this downspout. Multiply square feet by inches of rain by **0.623** to estimate US gallons before leaks, splash and first flush. A quarter inch on 500 square feet gives about **78 gallons**. Even an empty 55-gallon barrel can overflow in one storm.

Before the first storm and the first hard freeze

A full 55-gallon barrel holds about **459 pounds of water**, plus the barrel. Secure it against tipping, keep children out and leave the spigot accessible. Check screens and clear the first-flush drain after storms. Before freezing weather, empty and disconnect the barrel and route the downspout away from the foundation.

What counts toward your drinking water supply?

Under Colorado's ordinary residential rule, eligible homes may collect roof runoff in up to 2 barrels totaling 110 gallons for outdoor use on the same property. Keep this water out of your household plumbing and your drinking water total. Elsewhere, check local rules. Roof runoff can carry droppings, metals and chemicals.

Sources: Colorado Revised Statutes § 37-96.5-103 and CDC guidance on rainwater collection.

Treat water for a household

For fresh water where germs are the concern. If fuel, toxic chemicals or radioactive material may be present, switch to a known safe source. Follow local water advisories.

1. **Collect and settle**
   Mark the raw-water bucket. Let sediment settle, then pour the clearer water off the top or strain it through a clean cloth.
2. **Filter for the organisms on the label**
   Use the filter's dirty-side bag and hose. A typical backpacking microfilter catches bacteria and parasites. Viruses can pass through.
3. **Disinfect before drinking**
   For this setup, bring the filtered water to a rolling boil for 1 minute, or 3 minutes above 6,500 feet. Cool it covered.
4. **Store and dispense**
   Pour into a clean, sanitized, covered jug. Use the spigot. Keep raw-water hands, hoses and scoops away from this end.

How fast can you supply 4 people?

At the 1-gallon daily minimum per person, you need about **15 liters a day**. With a 4-liter gravity filter, that is 4 full bags. Run all 4. Time the whole job, including collecting, disinfection and cleanup. Record the fuel or disinfectant used. Gravel, sand or charcoal alone cannot make unknown water safe to drink.

Emergency drinking water bleach doses

Follow the bottle's drinking water instructions first. If none are given, these CDC doses apply only to fresh, regular, unscented **5–9% sodium hypochlorite** with no added cleaners. Skip splashless or scented bleach. Settle or strain cloudy water first.

Water volume	Clear water	Cloudy, colored or very cold
1 US gallon	8 drops	16 drops
5 US gallons	40 drops or ½ tsp	80 drops or 1 tsp

Mix and wait **at least 30 minutes**. Keep treated water covered. Chlorine bleach works poorly against some parasites, including Cryptosporidium. If those are a concern, use the boiling method above or a product rated for them. The table is for water you will drink. Empty jugs use a different sanitizing solution.

Sources: CDC, How to Make Water Safe in an Emergency and emergency water storage guidance.