FIELD REFERENCE / PUBLICATION EXCERPT

Flood Fight Problems

ORIGINAL PUBLICATION

Flood Fight Handbook

PUBLISHER

U.S. Army Corps of Engineers, St. Paul District

EDITION

2016

INCLUDED PAGES

Section 5, printed pages 25 through 31. The original handbook cover is included.

Compiled for The Survival University. The credited publisher produced the original material.

Flood Fight Handbook

US Army Corps of Engineers ®
St. Paul District





2016 Edition

Section 5: Flood Fight Problems

Many issues can arise during a flood fight. The most valuable asset in problem solving under emergency conditions is capable field personnel. Many problems can be solved quickly and efficiently through the application of common sense and sensitivity to human relations. Physical problems with the levees and related infrastructure can be identified early if a well-organized levee patrol team with a good communication system exists.

The problems most critical to the integrity of the flood barrier system are described below. Current conditions must be taken in to account before implementing a specific solution, including high and low temperatures, frost depth, and the level of water on levee slopes.

5.1 Definitions

Overtopping: Overtopping occurs when water levels exceed the crest elevation of a levee and flow into protected areas. A breach may occur as a result of overtopping. In some cases, a levee may be overtopped without breaching (Non-Breach). In these cases, the water does not erode the levee structure and the levee is still functional for the next event. ***Figure 9*** illustrates overtopping results.

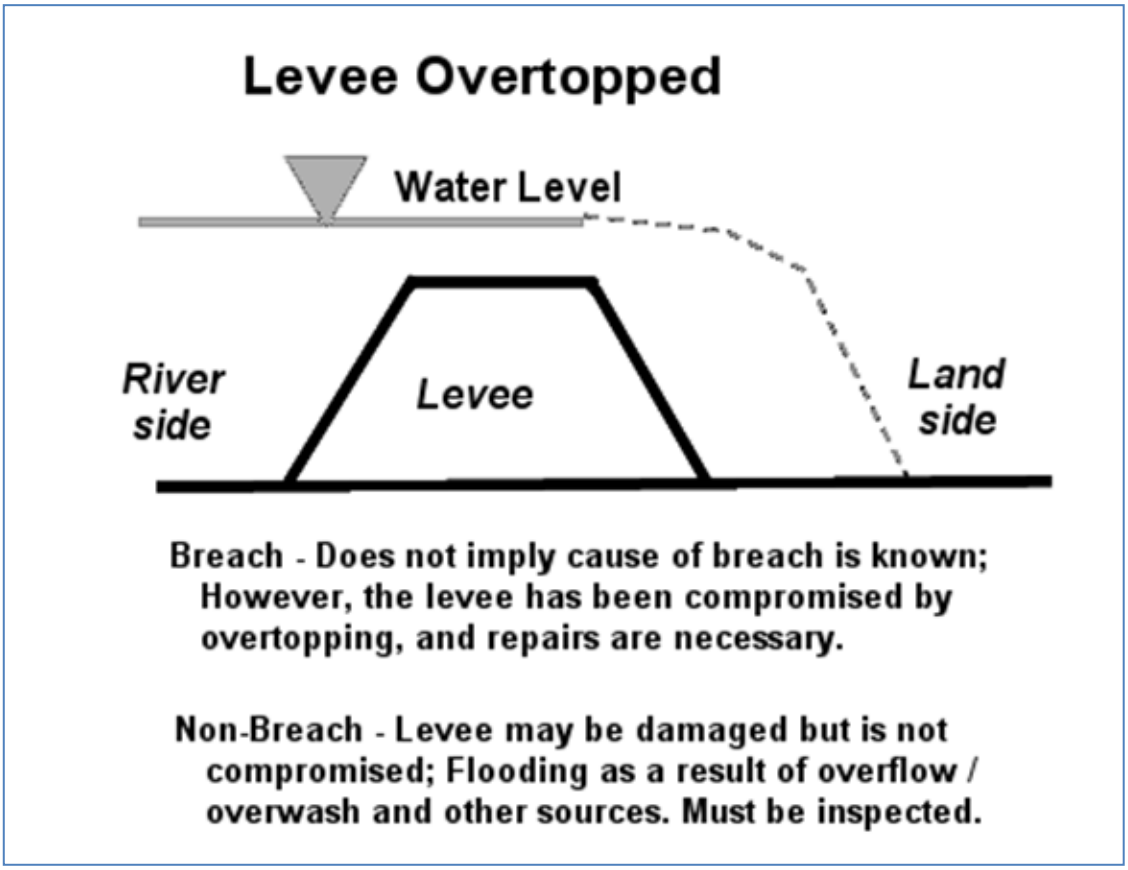

Figure 9 – Possible results when levee is overtopped.

Breach: A rupture, break, or gap in a levee system whose cause has not been determined.

Overtopping Breach: A breach whose cause is known to be a result of overtopping (system exceeded). A breach occurs during overtopping due to damages caused by the water flowing over the top of the levee. Once breached the levee must be repaired to function during the next flood event.

Failure Breach: A breach in a levee system for which a cause is known and which occurred without overtopping. A failure breach occurs due to a failure of the embankment at a level below the top of the levee. ***Figure 10*** illustrates a failure breach.

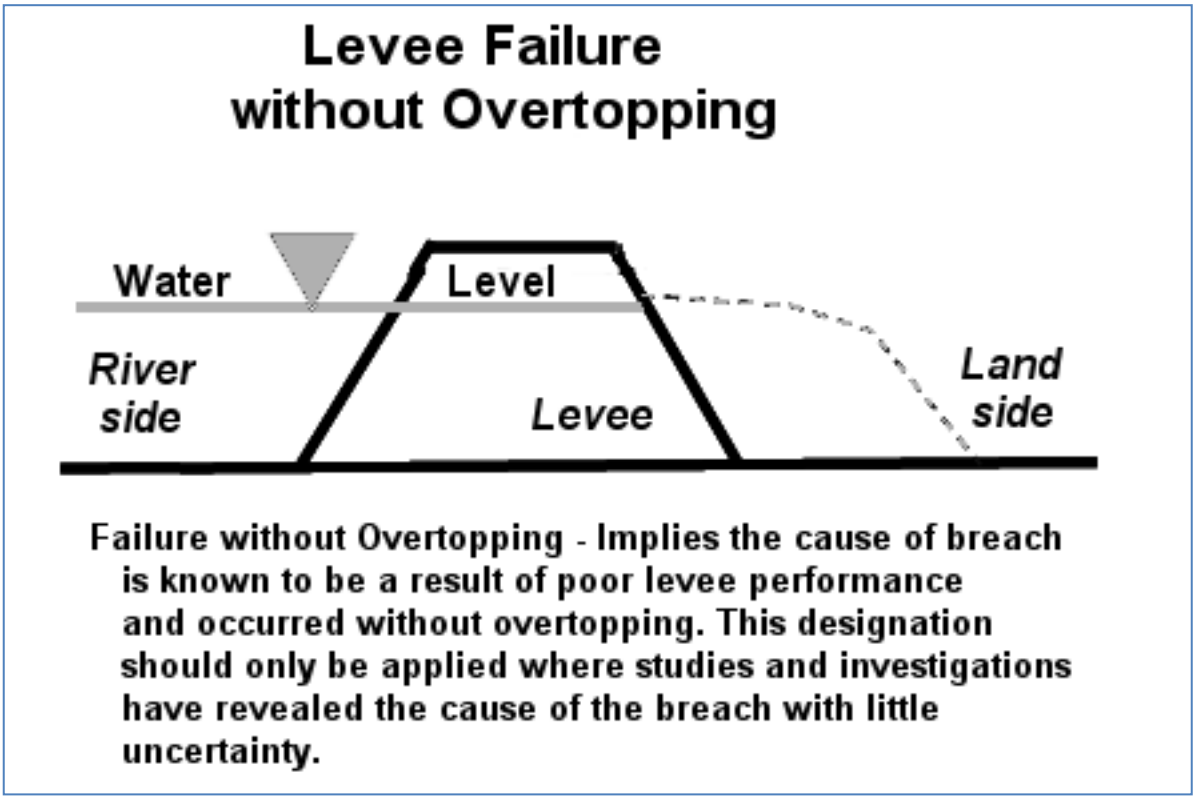

Figure 10 – Failure Breach

The chart below (***Figure 11***) further defines the appropriate flooding descriptions that correspond to the levee responses to rising water.

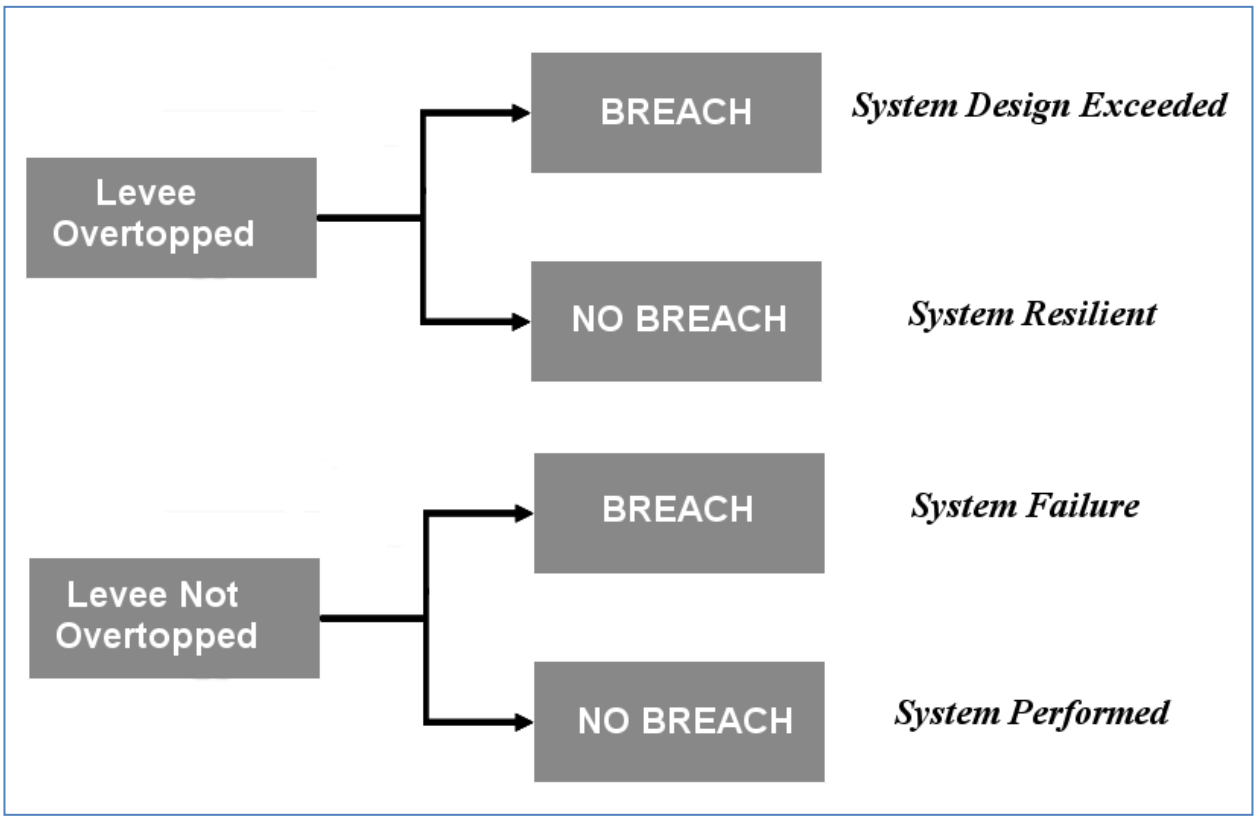

Figure 11 - Appropriate flooding descriptions corresponding to the levee responses to rising

5.2 Overtopping

Since most emergency levees are in urban areas, overtopping should be prevented at any cost. Overtopping will generally be caused by (1) unusual hydrologic phenomena that cause a much higher stage than anticipated, e.g. heavy rainfall or an ice dam in the channel, (2) insufficient time in which to complete the flood barrier, or (3) unexpected settlement or failure of the barrier.

Generally, emergency barriers are built two feet above the predicted crest level. If the crest prediction is raised during construction, additional height must be added to the barrier. On an existing or completed barrier, predictions of increases to water levels or settlement of the barrier will call for some form of capping to raise the barrier. Capping should be done with earth fill or sandbags using normal construction procedures.

5.3 Breaches

Levee breaches may occur as a result of overtopping; however there are other causes as well. Unlike overtopping, the solutions for breaches vary depending on the cause. The following subsections describe the different causes and how to prevent them.

5.4 Seepage

Seepage is percolation of water through or under a levee and generally first appears at the landside toe. Seepage through the levee is likely to occur only in a relatively pervious section. Seepage, as such, is generally not a problem unless (1) the landward levee slope becomes saturated over a large area, (2) seepage water is carrying material from the levee, or (3) pumping capacity is exceeded. Seepage that causes severe sand boils and piping is covered in the next subsection.

Seepage is almost impossible to eliminate and any attempt to do so may create a much more severe condition. Pumping of seepage should be held to a minimum, based on the maximum ponding elevation that can be tolerated without damages. In the past, attempts to keep low areas pumped dry resulted in sand boils, and additional time and effort were then expended in trying to control these sand boils caused by pumping. Therefore, seepage should be permitted if no apparent ill effects are observed and if adequate pumping capacity is available. If seepage causes saturation and sloughing of the landward slope, the section should be flattened to a 1V to 4H ratio or flatter. Material for flattening should be at least as pervious as the existing embankment material to avoid a pressure build up. Do not place clay over sand to flatten a slope.

5.5 Sand Boils

5.5.1 Definition. A sand boil is the rupture of the top foundation stratum landward of a levee caused by excess hydrostatic head in the substratum. Even when a levee is properly constructed and of such mass to resist the destructive action of flood water, water may seep through a sand or gravel stratum under the levee and break through the ground surface on the landside in the form of bubbling springs. When such a seep occurs, a stream of water bursts through the ground surface carrying with it sand or silt that is distributed around the hole in the shape of a cone. Depending on the magnitude of pressure and the size of the boil, it may eventually discharge relatively clear water or it may continue to carry quantities of sand and silt. Sand boils usually occur within 10 to 300 feet from the landside toe of the levee, but in some instances, have occurred up to 1,000 feet away.

5.5.2 Destructive Action. Sand boils can produce three distinctly different effects on a levee, depending on the condition of flow under the levee:

a. Piping Flow. Piping is the active erosion of subsurface material as a result of substratum pressure and concentration of seepage in a localized channel. The flow breaks out at the landside toe in the form of one or more large sand boils. Unless checked, this flow causes the development of a cavern under the levee, resulting in the subsidence of the levee and possible overtopping. This case can be easily recognized by the slumping of the levee crown.

b. Non Piping Flow. In this case, the water flows under pressure beneath the levee without following a defined path, as in the case above. This flow results in one or more boils outcropping at or near the landside toe. The flow from these boils tends to undercut the landside toe, resulting in sloughing of the landward slope.

c. Saturating Flow. In this case, numerous small boils, many of which are scarcely noticeable, outcrop at or near the landside toe. While no boil may appear to be dangerous by itself, the group of boils may cause saturation and flotation ("quickness") of the soil. This can reduce the shear strength of the material at the levee toe to such an extent that failure of the slope through sliding may result.

5.5.3 Combating Sand Boils. All sand boils should be watched closely, especially those within 100 feet of the toe of the levee. All boils should be conspicuously marked with flagging so that patrols can locate them without difficulty and observe changes in their condition. A sand boil that discharges clear water in a steady flow is usually not dangerous to the safety of the levee. However, if the flow of water increases and the sand boil begins to discharge material, corrective action should be undertaken immediately.

The accepted method of treating sand boils is to construct a ring of sandbags around the boil, building up a head of water within the ring sufficient to check the velocity of flow, thereby preventing further movement of sand and silt. ***Plate 10*** illustrates and describes the techniques for

ringing a boil with sandbags. Actual conditions at each sand boil will determine the exact dimensions of the boil and the flow of water from it, and the required sandbag ring.

In general, the following considerations should control construction of the sandbag ring: (1) the base width of the sandbag section on each side of the ring should be no less than 1-1/2 times the contemplated height, (2) weak soils near the boil should be included within the ring, thereby preventing a break through later, and (3) the ring should be sufficient size to permit sacking operations to keep ahead of the flow of water. The height of the ring should only be high enough to stop the movement of soil in the water, and not so high as to completely eliminate seepage. The practice of raising the ring to the river elevation is not necessary and may be dangerous in high stages.

If seepage flow is completely stopped, a new boil will likely develop beyond the ring. This boil could erupt suddenly and cause considerable damage. Where many boils are found to exist in a given area, a ring levee of sandbags should be constructed around the entire area, and, if necessary, water should be pumped into the area to provide sufficient weight to counterbalance the upward pressure.

In the case of smaller sand boils, large diameter metal or concrete pipe can be placed around the boil to reduce the flow of soil material from the boil. In such cases, take care not to stop the water flow from the boil, only the material flow. It may be necessary to cut a hole in the side of the pipe to allow water to exit.

5.6 Erosion

Erosion of the riverside slope is one of the most severe problems that will be encountered during a flood fight. Emergency operations to control erosion include the use of polyethylene sheeting and sandbag anchors. Poly placement along the riverward face of the levee is discussed at length in Section 3.4, Erosion Protection for Emergency Levees.

5.7 Sewer-Related Problems

During a flood fight, continued surveillance of possible sewer problems is necessary. Existing sewers in the protected area may cause problems because of seepage into the lines, leakage through blocked outlets to the river, insufficient manhole pumps, or old or abandoned sewer locations that were not known during pre-flood preparations. Any of these conditions can cause high pressures in parts of the sewer system and lead to backflow, collapse of the lines at weak points, and manhole covers blowing off.

Watertight sluice gates, or flap gates can be used to prevent backflow. Emergency stoppers may be constructed of lumber, sandbags, or other materials, using poly as a seal, preferably placed on the discharge end of the outfall pipe. ***Plate 7*** shows examples of prefabricated pipe stoppers that can be placed in the pipe to block flows. ***Plates 8 and 9*** illustrate methods of sealing off the outlet openings of a manhole with standard materials that are normally available so that the manhole may be used as an emergency pumping station.

If the water level in a manhole approaches the top, additional pumps in other manholes may alleviate the problem. In sanitary sewers, additional pumping may be required at various locations in the system to provide continued service to the homes in the protected area. When pumps are not available, manholes may have to be ringed with sandbags or contained by some other method, such as concrete culverts with a sandbag base that allows the water to rise up above the top of the manhole. Some leakage may occur that will require safe disposal.

To eliminate the problem of disposing of this leakage from manholes, the ring levee would have to be raised above the river water surface elevation. Doing so creates high pressures on the sewer and should not be done. As with sand boils, it is best to ring the manhole part way to reduce the head and dispose of any leakage that occurs.

Directly weighing down manhole covers with sandbags or other items is not recommended where high heads are possible as this will not work. A 10-foot head on a manhole cover 2 feet in diameter would exert a force of 2,060 pounds. Thus, a counterweight of more than one ton would have to be placed directly on the cover.

5.8 Other Causes of Levee Failure

In addition to the problems covered above, the following conditions could contribute to failure:

- Joining of an earth levee to a solid wall, such as concrete or piling.
- Structures projecting from the riverside of levee.
- A utility line crossing or a drain pipe crossing through the levee fill.
- The elevation of the tops of “stoplogs” on roads or railroad tracks are at a lower elevation than the top of the levee.
- Relying on railroad embankments as levees. Material comprising a railroad embankment may not be suitable as levee fill. Furthermore, the railroad embankment section often has a narrow top width and steep side slopes.
- Allowing pump discharge lines to discharge directly on the riverward levee slope. When discharge lines are allowed to discharge on the levee slope, severe erosion can occur, thus threatening the levee stability. Insure that outlets for pump discharge lines are placed riverward beyond the levee toe, and appropriately anchored to prevent movement.

5.9 Interior Flooding

Even when the levee performs as designed (***Figure 12***), interior flooding can occur. Some of the causes of interior flooding are:

- Seepage
- Sand Boils
- Rainfall Runoff
- Levee Penetrations – drainage conduits designed to drain the interior area during low flows do not close properly during the flood event and allow water to flow from the river side to the interior side.
- Pump Station Failures – pump stations designed to pump interior drainage over the levee can fail during an event due to pump failures loss of power.

Solutions for interior flooding are described in Section 4, Interior Drainage.

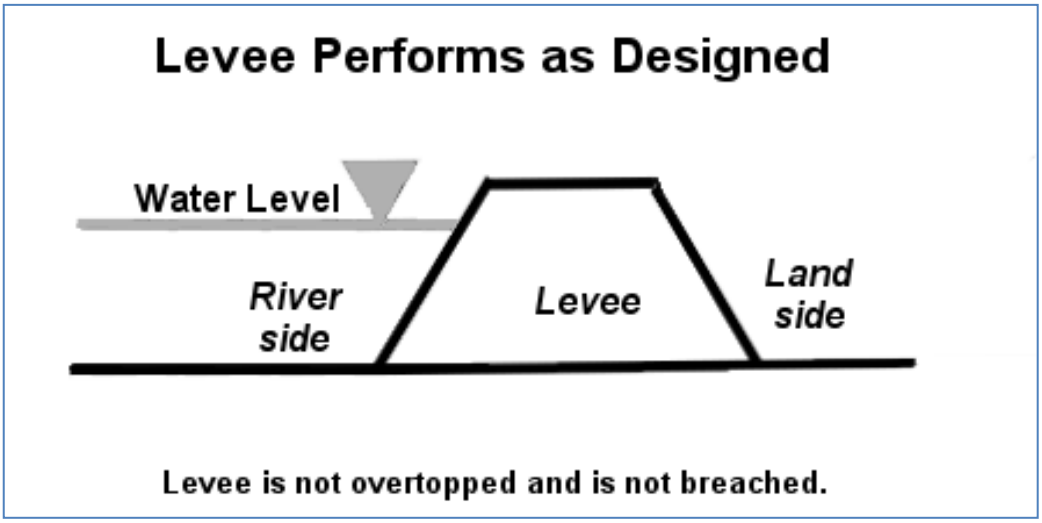

Figure 12 – Levee performs as designed.