UNIVERSITY OF CALIFORNIA
COLLEGE OF AGRICULTURE
AGRICULTURAL EXPERIMENT STATION
BERKELEY, CALIFORNIA

ADOBE CONSTRUCTION

J. D. LONG



BULLETIN 472

SEPTEMBER, 1929

UNIVERSITY OF CALIFORNIA PRINTING OFFICE
BERKELEY, CALIFORNIA
1929

ADOBE CONSTRUCTION

J. D. LONG[1]

Natural earth, or soil, has been used as a building material in almost all countries and by almost all civilizations.[2]

Archaeologists report the use of unburned brick and "green bricks" in the excavated areas in Mesopotamia and Egypt. What is thought to be the biblical "Tower of Babel" in the former country is of this construction; sundried bricks are said to form the foundation courses for the pyramids. Succeeding civilizations in India, Mongolia, Morocco, Italy, Spain, France, Germany, Russia, Scandinavia, England, and the Americas have made use of the material.

In some of the French provinces that formed the seat of operations of the World War, the rammed earth method of construction had a relatively large part in all structural work. In England, the material has been used as far back as the Romano-British era, but the traditional methods had become almost obsolete within the last half-century until a revival of interest in the rammed earth method immediately after the World War.[3]

In the Americas, also, earth construction dates back to antiquity.[4] At "Chan-Chan," Peru, and at Casa Grande, Arizona, are elaborate structures of earth. The former is thought by some archaeologists to be of an age comparable with that of the biblical civilization excavated in Mesopotamia;[5] the Casa Grande was so old as to be an object of superstitious awe to the natives when the first white explorers entered the region in the seventeenth century.[6] What is said to be the first building erected by the white immigrants in what is now the United States is the "Palace of the Governors" built in Sante Fe, New Mexico, in 1609 of sun-dried, or "adobe" brick. Originally used as a seat of the territorial government, it is now a state museum.

---

[1] Junior Agricultural Engineer in the Experiment Station.

[2] Williams-Ellis, Clough. Cottage building in cob, pisé, chalk, and clay. 125 p. Country Life Press, London, 1919.

[3] Ellington, Karl J. Modern pisé building, p. 76–96. K. J. Ellington, Port Angeles, Wash., 1924.

[4] Hodge, Fredrick W. Aboriginal use of adobe. Archaeologist 3(8):265. 1895.

[5] Lehman, Walter. The art of old Peru. p. 52. Longmans, New York, 1924.

[6] Pinkley, Edna T. Casa Grande, the greatest valley pueblo of Arizona. 23 p. Arizona Archaeological and Historical Society. Tucson, Ariz., 1926.

Earth-walled houses were erected by some of the early settlers on the Atlantic seaboard.[7, 8] Several scattered examples of such structures have been found, extending from the New England States to South Carolina. One two-story rammed earth residence now in use in Washington, D. C., is said to have been erected in 1773.[9] Plantation buildings and a church of rammed earth erected in South Carolina in the period 1820–52 are still in use. A two-story sun-dried brick farmhouse in Illinois, erected during the Civil War, is still occupied by descendants of the builder.[10] Modern residences of earth-wall construction have been built since 1920 in Washington, D. C., in Michigan, North Dakota, Arkansas, Colorado, and in all the southwestern states.[11]

In the early history of California adobe was extensively used as a structural material, and for certain purposes and in certain areas, at least, it was considered very satisfactory.[12] Most of the string of Spanish Missions were so built, and several are still in use, although many have fallen into decay through misuse and neglect. The first custom-house and the first theatre in the State, still in use in Monterey, are of this construction. The buildings and fortifications erected in the early Spanish presidio at San Francisco were of adobe. One small building of this regime, its exact erection date unknown, is now used as the Officers' Club of the U. S. Presidio which now occupies the site. Several adobe haciendas of the original Spanish settlers are still extant, as are a number of similarly constructed buildings in the mining camps of the goldrush days. With the influx of commercial materials, however, the use of adobe became almost a lost art until the revival of interest in the subject during the past five years.

The modern construction of this nature in California has been relatively inconsequential in amount. Since commercially produced materials have cheapened in cost, have been popularized by sales-appeal advertising, and have gained the preference of most professional builders, the advantages of a native material have often been overlooked. No material being entirely free of objectionable features, certain disadvantages of adobe have without question also contributed to its lack of popularity. Because of certain structural weaknesses of

---

[7] Johnson, S. W. Rural economy. William Elliot, New York. 1806.

[8] Report of the Commissioner of Patents, United States Department of Agriculture. p. 450–455. 1844.

[9] Coffin, Edward W. and H. B. Humphrey. Lower cost buildings. p. 42. The Publicity Corporation, New York. 1924.

[10] Information given by Chas. W. Russell, Virginia, Ill., March 26, 1928.

[11] Long, J. D. Progress in earth wall construction. Agr. Engr. 9:183–185. 1928.

[12] Tyson, Philip T. Geology and industrial resources of California. p. 41–42. Wm. Minifee & Co., Baltimore. 1851.

adobe, its use can not be recommended for large structures. The fact that some of the old Spanish missions of adobe have stood through the century with inadequate foundations, insecure roof fastenings, and high walls unsupported through long lengths is interesting; but these should not be taken as examples of safe design.

Nor are the houses erected a century ago to meet the requirements of that day indicative of what can be done with the material now. There can be no doubt that earth structures, when properly built to meet our modern requirements, can be relatively comfortable, durable, and healthful shelters. They appeal especially to builders who desire to follow the methods of tradition, to those with a sentiment for the use of local materials produced on the land where the structure is to be built, to those distant from a point of supply for commercially produced materials, to those desiring to secure particularly comfortable structures, and to those who desire to utilize their own labor or that of unskilled workmen to decrease the capital expenditure required. The use of the material is frequently advantageous for rural structures.[13]

Attention should be directed to the fact that adobe soils are not necessary for adobe construction. In fact, the characteristic tendencies of adobe soils to crack during drying make their use for earth wall construction difficult or even impossible. Soils ranging from sandy loams to clay loams are preferable.

METHODS OF EARTH WALL CONSTRUCTION

Several methods of constructing earth walls have been developed.[14] These may be divided into two general classifications: those in which the soil is used merely as a filler and is dependent upon some other material for its structural strength, and those in which the soil itself attains sufficient strength to carry both its own weight and that of the roof or other structural members resting on the wall. Five structural systems are used in modern earth-wall construction. These are the so-called "cajon" method coming under the first classification, and the "poured adobe," "cob," "adobe brick," and "rammed earth" construction, all coming under the second classification.

All five methods are commonly classed as adobe construction. Each method requires a manipulation of moist or wet soil to "puddle" it. In the puddled state the soil grains are brought close together so that

[13] Report of the earth wall building committee, American Society of Agricultural Engineers. Trans. Amer. Soc. Agr. Engr. 21:S31–41. 1927.

[14] Long, J. D., The use of earth for wall construction. Trans. Amer. Soc. Agr. Engr. 19:205–220. 1925.

there is a mechanical locking between the angular soil particles, and so that the surfaces in contact can be cemented by the very fine clay particles, or colloids, in the soil.

Organic material in soil is usually of a spongy nature and apparently opposes both the mechanical locking and the colloidal cementation of the grains. For this reason it is usually advised that the top six to twelve inches of the surface soil be discarded in adobe construction.

Cajon or Wall Filling Material.—This method is one in which the soil is used merely as a filler and is dependent on other materials for



Fig. 1.—A Mexican's home erected of 2 × 4 wood studs lathed on both surfaces and with the space between filled with mud. An example of cajon building. The appearance could be greatly improved by applying stucco.

structural support. The structural framework of the wall is made up of wood timbers, and the earth is placed between these to form the solid wall.

The exact details of the work depend upon the attendant conditions and upon the preference of the builder. Boards nailed to the exposed sides of the structural framework form cavities between the timbers into which the well-mixed mud is poured (see fig. 1). The mud may be carried in lumps and dropped snugly into place between the timbers, or sun-dried bricks may be formed and laid in a wall between the members of the framework.

Because there is no bond between the earth and wood and the mud tends to pull away from the wood in drying, the combination of the two different materials as in this method cannot be considered best

practice. Some very attractive and apparently durable structures have been erected by this method, however, and there is the advantage that much thinner walls can be used than in the other methods.

The wall surfaces may be finished by weather boarding nailed to the structural timbers or by stucco or plaster applied over a wire mesh reinforcing.

The term "cajon" coming from the Spanish, means in this usage "wall filling material." The method has been used to a very limited extent in California.



Fig. 2.—A ranch house under construction by the poured adobe method. At the left is a view looking into the forms on top of the wall, and at the right are shown the two farm laborers who hauled the soil from a selected site, mixed it to a stiff mud in the wagon box, and spread it in the forms. The forms are 1 × 10 inch boards which clamp against the completed wall and are wired together, leaving a net depth inside of about six inches. Wood spacers hold the form to the desired width at the top. The vertical cracks which usually appear more or less regularly in the completed courses are visible in the picture on the left. The simplicity of the required equipment and of the construction work are factors of importance to this method. Careful workmanship is required only in properly setting the forms to keep the wall plumb. (Method devised by J. M. Howells. Pictures by courtesy of L. W. Taylor.)

Poured Adobe or Mud Concrete.—The poured adobe method of construction modifies the cajon method to the extent that no wood studs are used, but thoroughly mixed mud is poured between forms directly in place in the wall and allowed to dry. The forms are removed, and the mud wall alone supports the roof load.

One method of forming such walls is to handle the mud much as monolithic Portland cement concrete is used in common practice. Water is added to the soil, and the mass is thoroughly mixed to a mushy consistency. Straw or other vegetable fiber may be added. The mixture is then shoveled into the wall forms. As with concrete, the water content must be adjusted to give the most workable mass; too dry a mixture will prove difficult to work into place to fill the form, while too wet a mass will flow through cracks in the forms, will shrink more in drying and will take much longer to dry out thoroughly.

The form may be handled in various ways. For simplicity and economy, forms made of 1 × 10-inch boards may be used. These are placed one board high around the foundation of the structure to be erected. One board is placed on either side of the foundation; the two are allowed to cover down four inches on the foundation and are separated at the top edge with spacers to the width of the foundation. They are then drawn tight with tie wires run through holes at convenient points. As four inches of the width of the board clamps to the foundation, the net depth of the inside of the form is six inches. The mud layer poured into this form is allowed to dry sufficiently to retain its shape, and the forms are removed, lifted, and clamped to the



Fig. 3.—Interior of poured adobe incubator house of Sutter City Hatchery. Erected in 1928. A 3½-inch layer of loose soil was spread over the ceiling for insulation. The soil for walls and ceiling was excavated from the interior of the house, making the floor approximately two feet below grade. In preparing the mud for the walls, trenches were spaded the length of the structure, the loosened soil flooded with water and covered with straw, and the mass mixed by hand.

section previously poured. This procedure is continued until the wall is raised to the desired height[15] (see figs. 2 and 3).

Another method of forming is to erect 2 by 4-inch studs every two feet on either side of the foundation, nail 1-inch boards horizontally to their inner surfaces to the height desired for the wall, and draw the two sides of the form tightly together at the desired width with tie wires. The wall is then poured as rapidly as the soil can be mixed and carried into place, pourings being kept at an approximately even height to equalize the pressure on the forms. When the mixture has dried sufficiently to retain its shape, the wires are cut and left in the

[15]Gray, R. M. A mud ranch house designed by a California engineer. Agr. Engr. 7:276. 1926.

wall, the forms removed, and the remainder of the structure completed. The walls of the house shown in figure 4 were so built.

In either variation of this method it is advisable to put the rough frames for the doors and windows in place before the mud is poured into the form. With many soils, as the walls dry out vertical cracks will develop through each of the horizontal layers representing the various pourings. Unless these are continuous through a considerable height of the wall or of a width greater than $\frac{1}{16}$-inch, they do not appear to weaken the wall materially. The cracks are sometimes so regularly spaced as to give the wall an appearance of sun-dried brick construction. Mixing straw with the soil lessens the tendency to cracking. Plastering and stuccoing should be delayed until the wall is thoroughly dry.



Fig. 4.—Farm home of Mr. and Mrs. J. W. Murphy, erected by the poured adobe method near Farmersville, Tulare County, California, in 1927.

Since the soil is handled but once, and the processes are all relatively simple, this method is probably the quickest and cheapest adobe construction method. As some soils crack so much that they are not suitable for this method, however, it is considered advisable first to make small test specimens or erect short sections of wall before starting the construction of any elaborate structure. The cohesion between the soil grains in these preliminary test structures, the amount of cracking occurring as the mud dries, and the apparent strength of the test pieces may be taken as a basis for judging the fitness of a soil for construction use by this method.

The name "poured adobe" is a logical definition of the procedure of the method. Another name which has sometimes been applied is "mud concrete." While relatively few structures have been erected

by this method in California, it apparently is second in popularity only to the sun-dried brick method.

The English Cob.—Cob is a stiff mud piled in relatively thick layers directly in the wall without using forms. The mud must be mixed to a stiff consistency so that it will have little tendency to slump.

Straw or some other organic fibre is usually mixed with the mud and the mixture then laid in place along the length of the wall in layers as high as they are thick, the thickness frequently being 2 or 2½ feet. After being solidly compacted and shaped approximately to the width desired with the forks on which it is handled, the mud is allowed to dry. Before it has become entirely dry, a board is placed on top of the layer to serve as a straight-edge, and the sides of the layer are trimmed plumb with a hay knife or similar tool. Another layer is then placed on top of the completed layer, and the process continued until the wall reaches the desired height.[16]

Cob is the traditional name applied to this form of building in England, where it was used to a considerable extent up to fifty years ago.[17] It is supposed to derive its name from the use of cobble stones, which in certain localities were dropped into place in the mud layers as the work progressed. The method has not been used to any great extent in this country.

Sun-dried or Adobe Brick.—Bricks may be molded from a stiff mud, dried in the sun, and laid up in a wall by methods similar to the laying of the standard burned brick. Straw is usually added to the mud mixture from which the bricks are molded.

A common procedure of the Mexican workmen who do most of this work in the southwestern part of the United States is to spade a six-inch layer of the area intended for the basement. A layer of straw or grass about one and a half inches thick is then spread over the spaded soil; horse manure is frequently preferred, apparently because the straw in it is usually broken into relatively short lengths which work more readily into the mud.

After the mass has been thoroughly wetted, the laborers remove their shoes, roll up their trousers, and proceed to tramp the straw well into the mud. Short-handled hoes are used to help turn and cut the mass. When it is thoroughly mixed to a stiff mud, it is shoveled on to a wheel barrow or litter and carried to a smooth, level

[16] Adams, J. W. Adobe as a building material for the plains. Colorado Agr. Exp. Sta. Bul. 174:1–8. 1910.

[17] Weller, H. O. Building in cob and pisé de terre. Building Research Board, Dept. of Scientific and Industrial Research. (London.) Special Report 5:3–14. 1922.

area nearby, which is free of vegetation and trash. Here a bottomless wood form is laid flat on the ground and filled with mud. Care is taken to ram the mud into all corners of the form, and the top is then struck off level. The form is then carefully withdrawn, leaving the brick lying flat on the ground (see fig. 5). The inner faces of the form are hurriedly washed to free them of any material which might have adhered to spoil the shape of succeeding bricks, and the molding process is repeated. The bricks are allowed to lie flat for a day or so until they are sufficiently strong to hold their shape when handled. They are then set on edge so that the air may circulate freely on both sides. This precaution is necessary in order that the bricks may dry



Fig. 5. Molding the "dobies" flat on the ground. The form is removed immediately, and the mud allowed to dry one or two days, after which the brick is stood on edge so that it will dry evenly from both sides.

evenly on both faces; otherwise they will tend to warp and are more liable to crack. After three days to a week or more of drying in this position, the bricks are stacked in loose piles adjacent to the building site. With this equipment, 250 to 300 bricks are a day's output for two men.

The forms in common use for molding the brick are constructed of surfaced lumber, fastened with wood screws, and are usually of a size to form bricks 4 by 12 by 18 inches. A brick of this size will weigh between 40 and 50 pounds, about the maximum weight for convenience of handling. It has a volume of one-half cubic foot, and its shape and dimensions are such that it will work readily into walls of 12, 18, 24, and 30-inch thicknesses. Other sizes, both larger and smaller, are used, the maximum being 6 by 12 by 24 inches, forming a brick containing one cubic foot volume and weighing about 100 pounds.

Occasionally a builder will line his form with sheet metal to secure more perfectly formed bricks and to secure greater ease of form removal. Frequently the molds have partition boards and are large enough to form two or three bricks with one placing. Setting the form on a concrete or wood platform rather than on the ground results in more perfectly formed bricks.

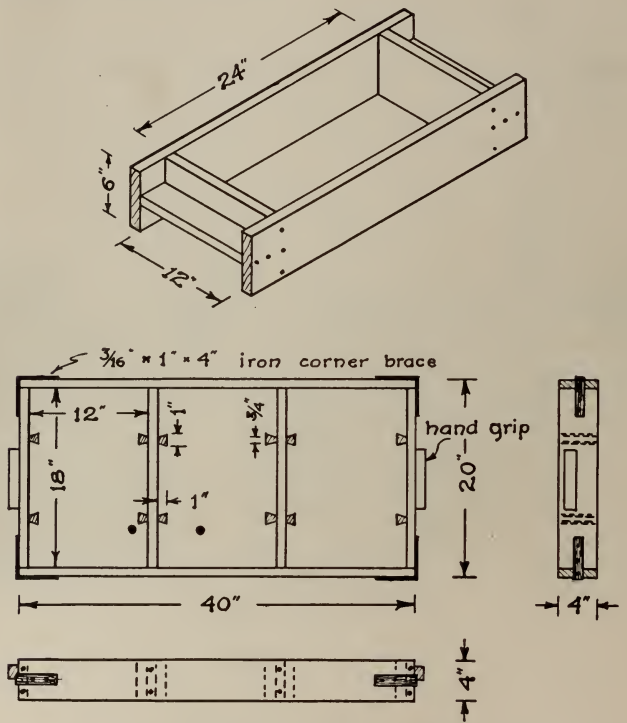

Fig. 6.—Forms used in making sun-dried brick. At the top is shown a form for a brick 6 × 12 ×24 inches. At the bottom are three views of a form for molding three bricks, each 4 × 12 × 18 inches. Either form may be lined with sheet metal to make its removal from the bricks easier.

An improvement on the simple rectangular brick form is to place shaped 1-inch strips on the inner faces of the forms so that when the bricks are molded they will have keystone-shaped grooves running vertically on either edge (see fig. 6). This groove provides an excellent plaster and stucco key for the wall formed of the brick.[18] Other shapes of blocks may be nailed inside the brick molds to form specially shaped bricks which may be required around door and window openings.

[18] Suggested by C. V. Maddux, labor commissioner, Great Western Sugar Co., Denver, Colorado. Report of Earth Wall Building Committee, American Society of Agricultural Engineers. Amer. Soc. Agr. Engr. Trans. 21:1927.

Various devices and practices have been used to lessen the labor of making adobe brick. Colorado farmers frequently select a patch of prairie sod where the grass is thick and tall, then plow this sod about four inches deep, and work this with a disc harrow or cultivator, adding water until the soil is too wet to be worked further with the machine. Further mixing is accomplished by leading horses back and forth over the plowed area, and by adding water until the mass can be handled with a 6-tined manure fork, when it is carried out to one side and molded into bricks.[19]



Fig. 7.—The Farm Bureau of Tulare County, California, used a concrete mixer to pour "flats," which were then cut into brick size with a knife drawn along a straight-edge. (Courtesy of W. E. Gilfillan.)

One of the earliest power mixing devices in use in California was the horse-power mixer. One horse on a 10-foot sweep was the motivator. The sweep was attached to the upper end of a vertical spindle which revolved in a wood casing two feet square. Soil and straw were inserted at the top of the casing, the mass was well wetted, and the horse was started on his circular path. Four or six horizontal arms on the spindle served to mix the mass, which was then removed at the bottom. Similar mixers using a horizontal spindle in a semi-cylindrical vat and powered with a gas engine have been used recently. Standard concrete mixers have also been employed.

Where mixing machines with a large capacity are used the molding of the individual bricks becomes the most laborious and slowest part

[19] Sjogren, J. W., and J.W. Adams. Adobe brick for farm buildings. Colorado Agr. Exp. Sta. Bul. 308:4. 1926.

of the process. To overcome this, some builders with machine mixers use large flats about six feet wide and of any desired length, into which the mud is poured to the desired thickness for the bricks. These flats are then cut into the individual brick sizes by using a straight-edge and knife (see fig. 7). After the mud has dried sufficiently to retain its shape the forms are removed and the bricks "broken out" and placed on edge to complete the drying. Unless exceptional care is taken the bricks formed in this way are not so uniform nor so perfectly shaped as those molded individually.

After enough bricks have been molded and dried, the wall is laid up, the bricks being laid by methods similar to those used with



Fig. 8.—Laying the sun-dried bricks. Mud is spread in half-inch layers to serve as mortar between bricks.

common brick (see fig. 8). A mortar made of mud, wetter, but otherwise similar to that used in the brick, is usually laid in about half-inch thicknesses between the brick courses. Lime and cement mortars may be used, and when squeezed from the joint provide a good stucco bond. Broken bits of stone, tile, or concrete are sometimes incorporated in the edge of the mortar joint to provide a plaster bond.

Door and window frames should be built into the wall as the work progresses (see fig. 9). The bricks are readily cut to fit by strokes of the edge of the trowel, and in the better-class work shaped bricks to fit against door and window jambs may be molded in specially fitted molds. In the fitting of door and window frames, account must be taken of the fact that some settling will occur as the mud mortar dries. This is discussed in detail in the door and window openings section under structural design.

"Sun-dried brick" is probably the best descriptive English term to apply to this form of building, but the name "clay lump" which is applied to such construction in England is also good.[20] Completed buildings of sun-dried bricks are shown in figures 10 and 11.



Fig. 9.—The door and window frames are put in place as the adobe brick walls are erected. The frames should be firmly braced to prevent distortion. (Courtesy of M. A. Meador.)

In the southwestern United States the method is commonly known as "adobe brick" or "adobe" construction. The word "adobe" comes from the Spanish and means "brick," the Spanish verb "adobear" meaning "to knead." In the United States this method is the best known and most widely practiced of the forms of earth construction.



Fig. 10.—Sun-dried brick cottage on the U. S. Department of Agriculture Cotton Experiment Station at Shafter, Kern County, California. Erected in 1924. The walls are covered with a cement stucco.

Rammed Earth or Pisé de Terre.—This method consists of tamping moist earth in place in the wall between forms. The soil should be just moist enough to hold together in a ball when it is squeezed in the hand, and yet dry enough to fall apart when dropped to the

[20] Williams-Ellis, Clough. Cottage building in cob, pisé, chalk, and clay. p. 121–125. Country Life Press, London. 1919.

ground from waist height. A farmer will recognize this as being about the right moisture content for plowing. For the best work and the smoothest wall finish, screening the earth through a half-inch mesh screen to remove the stones, clods, and vegetation and to pulverize the soil so that it will consolidate evenly is an advantage.[21]

If the soil as it comes from the ground is considered to have the proper moisture content, it is screened and is ready for the wall. If it does not have sufficient moisture as it comes from the ground, or if it has stood in piles and dried out, it will require moistening. This is best done with a garden sprinkling can or a hose throwing a fine spray



Fig. 11.—The Farm Bureau office building erected of sun-dried brick in Visalia, Tulare County, California, in 1928. Nearly 100 members of the county organization volunteered their efforts for various periods during the brick making and wall erection. Skilled labor was secured for the floor and roof construction, and for other details in the building. The exterior walls were given one coating of a cement wash, applied with a brush.

of water. The soil while being wetted should be thoroughly mixed to obtain a uniform moisture distribution.

Forms of various designs have been used in this work. The main requirements are that they shall be sufficiently rigid to withstand the high pressure exerted on them as the earth is tamped into place within, and that they shall be economical of construction and convenient to use. In almost all designs these requirements have resulted in the use of sectional forms, the forms being removed and reset after the completion of each small panel of wall.

A convenient practice has been to use 10-foot lengths of 1½ or 2-inch plank. These are cleated together to form two panels, each

[21] Betts, M. C., and T. A. H. Miller. Rammed earth walls for buildings. U. S. Dept. Agr. Farmers' Bul. 1500:1–25. 1926.

about 30 inches high and 10 feet long. One panel is placed on either side of the foundation, and the two are bolted together with long bolts running through the panels near both top and bottom edges and across the wall space. To avoid springing of the panels because of the internal pressure, the bolts are used in conjunction with removable 2

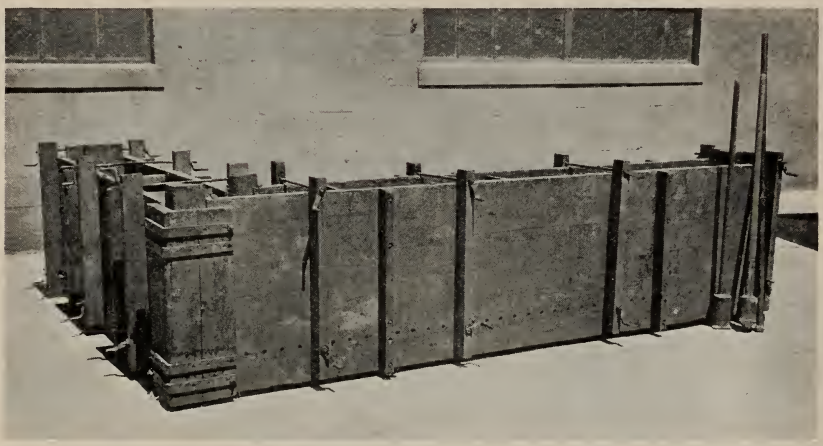

Fig. 12.—Forms for rammed earth construction made according to design shown in figures 13, 14, and 15.

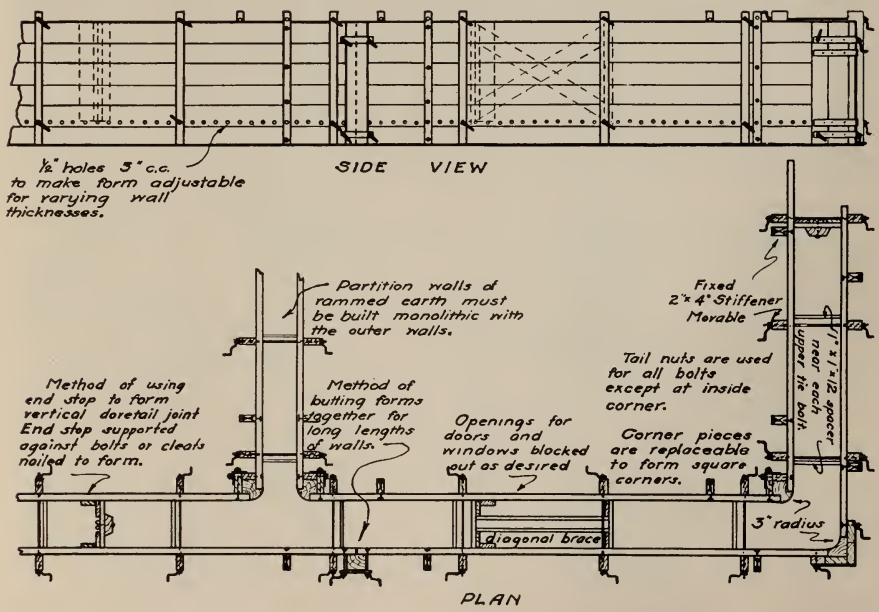

Fig. 13.—Set-up of forms for rammed earth wall, showing arrangement for forming corner and partition walls and blocking out openings. This form is adjustable to all wall thicknesses which are divisible by three inches.

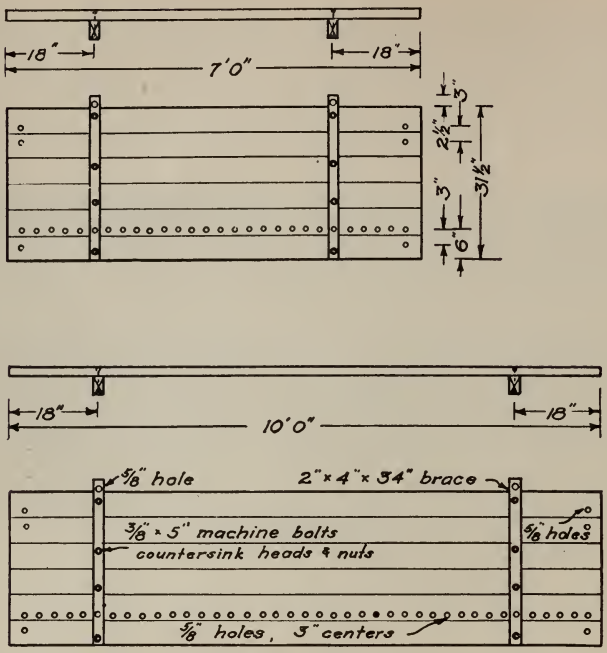

Fig. 14.—Side and edge views of 7 and 10-foot panels for rammed earth forms. To construct, use six 1½ × 6-inch, tongued and grooved, full length planks for each panel. Make two panels of each length. The row of holes spaced three inches apart along the bottom of each panel is necessary to permit adjustment for various wall thicknesses (varying by three-inch differences) in setting up to form corners and partitions. Down a straight length of wall, cross bolts and stiffeners are spaced approximately three feet apart. All woodwork is to be surfaced and oiled or painted.

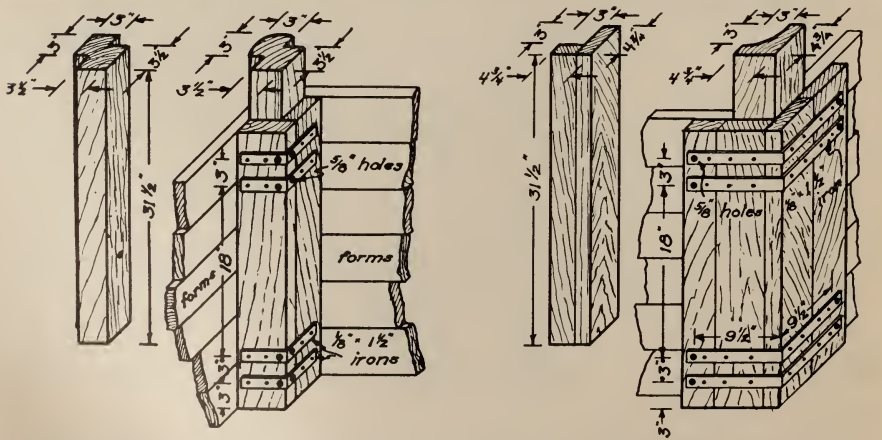

Fig. 15.—Inside and outside corner members for the rammed earth form. Two filler members for each allow a choice of making curved or square corners. The filler members are held in place by friction.

by 4-inch stiffeners. These stiffeners should be spaced not more than three feet apart down the length of the panels (see figs. 12, 13, 14, 15, and 16).

The panels are allowed to overhang or clamp to the top six inches of the foundation, about 24 inches net depth being left inside the form. Vertical stops are placed at either end and held in place by cleats nailed to the panels. These end stops, such rough frames as may be required to frame out door and window openings, and spacing

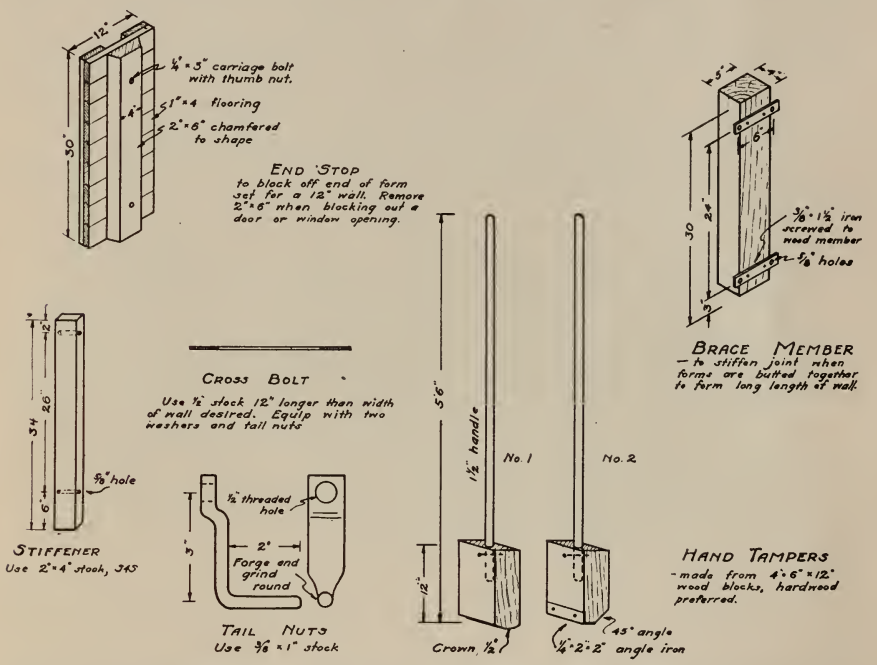

Fig. 16.—Hand tamping tools and accessories for the rammed earth forms.

members placed adjacent to the top row of bolts hold the two panels to the desired wall width. The nuts on the cross bolts are then tightened. Care must be exercised to keep the forms plumb and in the true line of the wall during this tightening process. Special forms are required for corners and intersecting walls in order that these planes of possible fracture may be molded in one piece.

The damp soil is placed in the form and leveled to a uniform 4-inch layer. Much variation in the level of the layer leads to later difficulties in finishing the wall section. A 4-inch depth appears to be the practical limit to which it is possible to compact loose soils under a hand tool, and hence it is the most economical depth. In experimental work by the Agricultural Engineering Division of the Cali-

fornia Agricultural Experiment Station it has been found that layers greater than 4 inches show evidences of loose structure in the lower horizons of each layer when the forms are removed, and accordingly do not develop a wall of uniform strength or texture. Layers of soil less than 2 inches in depth usually break away under the tamper and fail to consolidate in a uniform layer.[22]

Hand tamping has necessarily been the common procedure in the past (see fig. 17). The tamper itself is of hard wood, soft wood faced with iron, cast iron, or large pipe or boiler plate welded into shape. The bottom face should not be a flat surface; a wedge-shaped base will shift and compact the soil grains more thoroughly in the tamping process. The results of an investigation of these two tool types conducted at the University Farm, Davis, are given in table 1.

A tamper weighing from 8 to 15 pounds is usually preferred by the workman.

TABLE 1

THE EFFECT OF THE TAMPING TOOL ON THE COMPRESSIVE STRENGTH OF RAMMED EARTH SPECIMENS

Soil series	Method of puddling	Initial moisture, per cent	Age, days	Volume weight, pounds per cu. ft.	Compressive strength, pounds, per sq. in.
Yolo loam	Tamped with flat-faced tamper	12.9	191	96.7	91.8
Yolo loam	Tamped with wedge-faced tamper	12.9	191	104.5	103.3

Tamping should be directed first along the faces of the form and then through the interior of the mass, care being taken to compact all parts uniformly and to the same level. The workmen will usually find it more convenient to stand inside the form; with their feet they can aid materially in compacting and leveling the soil surface. The blows should be quick and sharp rather than heavy; and where two or more men are working on the same wall section, the tamper blows should not be in unison, for the vibrations so set up may weaken the structure. The four-inch layer of loose soil will usually be compacted to about a two-and-a-half-inch depth by the third or fourth time any given area is tamped over.

[22] Some experimenters advise the use of thinner layers, stating that layers of loose soil 1 and 2 inches deep consolidate to a more uniform wall than where thicker layers are used. The shape of the tamping tool face is probably the determining feature, a narrow faced tamper penetrating deeper and compacting more solidly in the deep soil layers than a flat tamper. See: Miller, R. C., Rammed earth. North Dakota Agr. Exp. Sta. Bul. 217:66. 1928.

When sufficiently compacted, the soil layer will give a resonant thud under each blow of the tamper and will allow but one-eighth to one-fourth-inch impression. Another four-inch layer of loose soil should then be placed in the form, and the process repeated until the form is filled to near the top with compacted soil. The form bolts may then be loosened and drawn from the wall, the form removed and set up at the end of the wall section just completed, and the operation repeated until the first course of the wall extends entirely around the structure (see fig. 17). The forms can, however, be removed from a section of newly tamped wall, raised immediately, and set, and another



Fig. 17.—Tamping the second course on a rammed earth poultry house. Experimental work at the Branch of the College of Agriculture, Davis, California, in 1926.

layer of wall tamped on top of the first course. In any case the work is continued until the wall extends to the desired height, entirely enclosing the structure.

Since the hand-tamping method is necessarily laborious and slow, attempts have been made recently to adapt machinery to the task.[23] Of the labor-saving equipment which has been suggested or tried, the compressed air tamper appears to be the most logical. Both in its flexibility and in its relative ease of transportation and use on the wall, it shows many marked advantages. The rhythm of the tamper imparts a vibration to the wall, but it appears to have no destructive action on the strength. Pneumatic tamping equipment in experimental use on University Farm is shown in Fig. 18.

[23] Vivian, C. H. Homes of rammed earth. Compressed Air Mag. 32:1945–48. 1927.

Publications describing this type of construction have almost uniformly urged that no straw or other vegetable matter be added or permitted to remain in the soil composing the wall. This recommendation would not always seem desirable in the light of recent experimentation at the California Experiment Station where, with an alluvial loam soil, an admixture of approximately ⅕ part of oat straw by loose volume gave an increased strength amounting to 80 per cent in small specimens (see table 3). It has also been observed in the work at this institution that rocks and moist clods up to the size of a walnut may be compacted in the soil layer without difficulty or without any noticeable weakening of the completed wall. In some instances,



Fig. 18.—A compressed air tamper may be used successfully in the rammed earth method. (Pneumatic equipment lent by the Pacific Telephone and Telegraph Company for experimental work at the Branch of the College of Agriculture, Davis, California, in 1927.)

therefore, if the soil is well broken up in removing from the borrow pit and does not require additional moisture, putting it through a screen may be an unnecessary refinement.

The rammed earth method is frequently spoken of by its French name, pisé de terre. It has been used successfully in several parts of the United States. Structures of this make are to be found in this state in gold mining towns now deserted and in a few modern residences.

Rammed Earth Blocks.— A limited amount of work has been done with rammed earth pre-cast into blocks of convenient size and shape, which can be laid up in a wall as adobe brick are laid. Such a procedure obviates the use of the heavier, more expensive forms

required by the standard process and gives to the rammed earth method the same adaptability to working conditions as the sun-dried brick. The rammed brick are usually less dense, however, and more liable to break than the sun-dried brick.

In laying the rammed earth bricks the structural strata or laminations of the brick should be placed horizontally in the wall, so that the vertical thrust of the wall may be perpendicular to them. A convenient shape and size for the block is 9 inches deep, 12 inches wide and 18 inches long. One workman can hand tamp about four such bricks an hour. For columns or posts it may sometimes be advisable to form blocks considerably deeper than broad, as 9×9 inches in cross-section by 18 inches deep. Blocks of the latter size and shape supported loads varying from 12,000 to 27,000 pounds maximum in tests made at the University Farm.

The form used for this purpose should be sturdily built, and secured with quick-acting clamps to speed up the work. The sides of the form should be completely removable or hinged to drop below the level of the bottom so that the brick may be securely grasped for removal. Angle irons rabbeted into the inside top edges of the sides will prevent damage to the form from mis-directed tamper blows.

CHOICE OF CONSTRUCTION METHOD

The choice between methods depends upon the soil to be used, the climate, the size of the working crew, and the preference of the builder.

Coarse-grained soils tamp more readily and so appear to be more suitable for the rammed earth method than the small, smooth-grained soils. A soil composed of ⅓ clay, ⅓ sand, and ⅓ gravel approaches the ideal for pisé construction. Heavy soils which contract markedly on drying and so would be unsuitable for a monolithic wall may frequently be used in the precast, sun-dried units.

The damp rammed earth process appears to be less dependent on good drying weather and may be preferable in the temperate zones to the wet sun-dried brick, poured earth, or cob processes. Under most California conditions, no difficulty will be experienced with the latter methods in securing suitable drying.

Because of the weight of the type and size of forms generally recommended for the rammed earth construction, a three-man crew is required for greatest efficiency in construction. More men may be used, but the extra equipment necessary is considerably more expensive than that necessitated by the other methods. The sun-dried brick method requires handling the same unit volume of soil from three to

four times more than in the monolithic processes, but is very easily adaptable to any sized working crew. With the poured adobe and cob processes the size of the working crew must be adjusted to the rate of drying of the completed work in order to secure labor efficiency.

Persons interested in earth construction frequently exhibit decided preferences for a certain method. Proponents of the poured adobe or sun-dried brick methods advance the simplicity of the former and the flexibility of the latter as outstanding advantages. Preference for the rammed earth method is usually based on the fact that this is "cleaner than the mussy, mud methods," or that it leaves a smooth wall surface which makes the wall finishing easy and economical.

Accurate, comparative costs of the various methods are difficult to secure. In one poured adobe farmhouse two laborers raised the 18-inch walls for the 27 × 33-foot structure an average of six inches a day, or at the rate of 4.5 cubic feet of wall per man hour. In sun-dried brick construction two laborers can make about 250 brick 4 × 12 × 18 inches in a day, and can lay in the wall approximately the same number per day. This is at a rate of 3.5 cubic feet of completed wall per man-hour of labor. Reports of rammed earth construction vary widely, largely, it would seem, because of soil differences; but the rate averages between 1 and 2 cubic feet of wall per man-hour. On a small experimental rammed earth structure, at the University Farm, where pneumatic tamping equipment was used, a rate of 7 cubic feet per man-hour was attained.

SELECTION OF THE SOIL MATERIALS

One of the chief advantages of the soil as a building material is that it is a native product. This is advantageous both from the practical viewpoint where the proximity decreases transportation costs and the capital expenditure required; and from the artistic which finds its most satisfying expression in the use of natural materials and simple, restful architecture.

For the sake of economy in cartage costs the soil to be used should be taken from as near the building site as possible. The maximum saving usually results if the soil excavated from the cellar is satisfactory for use in the walls.

Since all soils are not suitable for use in walls it is necessary that a study of the available soils be made as the preliminary to all construction projects. Where no one soil is satisfactory it may still be possible to secure successful results by mixing various soils types or by applying various admixtures to an individual soil.

Soil Characteristics.—Tests which have been made at the California Agricultural Experiment Station on small specimens of soil puddled as it would be for use in walls have shown that the specimens molded from the wetter mixes, such as would be used in making sun-dried bricks or pouring a mud concrete wall, are stronger than the damp mix tamped as for making a rammed earth wall (see table 2). In the dried specimens from six soil series common to California, which had been mixed to various moisture contents and tamped damp into the molds or worked into them from a mud consistency, the mean unit compressive strength ranged from 60 to 785 pounds per square inch, averaging 473 pounds per square inch for the wet, puddled mixes, and 203 for the damp, rammed specimens. In but one soil series, a sandy loam low in colloidal material, was the strength developed by the rammed earth specimens greater than that of the specimens molded from a mud consistency. In two clay loam series the resulting strengths of the tamped specimens was less than one-half that of those molded from mud. None of the specimens contained straw or other admixture.

TABLE 2

Compressive Strengths of Puddled Soils

Soil series	Initial moisture content, per cent	Method of puddling	Moisture when tested, per cent	Volume weight, pounds per cu. ft.	Compressive strength, pounds per sq. in,
Placentia loam	4.18	Tamped	2.18	100.5	72.5
	8.55	Tamped	2.38	125.5	443
	14.17	Worked	2.6	134	750
	26.02	Stirred	2.2	125	785
Yolo fine sandy loam	10.9	Tamped	3.4	104.5	190
	15.9	Tamped	3.1	107.5	342
	28.9	Worked	3.6	110.5	445
Yolo loam	12.9	Tamped	4.3	106	158.5
Hanford sandy loam	7.7	Tamped	0.9	115.5	112
	15.5	Tamped	0.6	110	153
	25.0	Worked	1.1	103	109
Holtville silty clay loam	9.4	Tamped	1.6	94.2	60
	17.1	Worked	3.5	114	95
	27.8	Worked	4.2	106	500
Yolo clay loam	11.9	Tamped	5.1	96.5	102
	17.3	Tamped	5.5	102.5	268
	29.1	Worked	5.7	93	570

These experiments and observations led to the conclusion that coarse-grained soils, such as loams and sandy loams, tamp more readily, acquire a higher relative strength, and so appear to be more suitable for use by the rammed earth method than the soils of small, smooth grain such as the clay and clay loams.

There are reports of certain soils which have a tendency to go through a process called "slacking" after puddling; that is, the soil crumbles as it dries or if it is subjected to heavy frosts. Such soils would appear to be wholly unsuited for building purposes, but are not common in California.

The results of the laboratory tests quoted here should not be considered to represent accurately the conditions of actual construction. Monolithic mud walls of the mud-concrete method which have cracked in drying, or sun-dried brick laid up in mud mortar of uncertain strength, may have actual structural strengths less than those represented in these small uniform specimens. All of the soils used gave compressive strengths sufficiently high to have a considerable factor of safety in supporting any ordinary roof load if built in walls twelve or more inches thick. Samples taken from a twenty-year-old adobe brick building in Brawley, Imperial Co., averaged 109.5 pounds per square inch, and others from the century old Mission San Antonio de Padua at Jolon, Monterey Co., averaged 260.

Soil Admixtures.—It is not uncommon for builders to mix two or more soil types in the hope of securing a better building material. Usually these mixtures are of a clayey soil with one too sandy to be used alone, or of sand or loam with a soil that is too clayey. In one test of the series conducted at the California Experiment Station sand and gravel were added to a clayey loam in the proportion of one part of admixture to four parts of soil, giving compressive strengths slightly above those of the natural soil (see table 3). A one to three proportion of gravel lowered the strength about one-third from that of the natural soil.

There appear to be two beneficial results from mixing straw with the earth used in wall construction. In the wet mixes the straw apparently serves as drainage channels, assisting in conducting the moisture from the center of the mass as it dries. It has been observed that some soils shrink and crack less in the poured adobe and sun-dried brick methods if straw is added to the mix. And in one series of tests using one soil type in the rammed earth method the straw proved a reinforcement, increasing the compressive strength nearly 80 per cent (see table 3). The proportions used in practice vary, but by loose volume are frequently one to five (one inch of loose straw scattered over a five-inch depth of loose soil). Straw in lengths of two to six inches is easier to incorporate in the mixture than the long length.

An objection is frequently raised to putting straw in an earth wall on the grounds that it will decompose. There would appear to be

little justification for this belief: adobe bricks removed from century-old missions and haciendas show the straw to be well preserved, and in some cases as bright in color as if it had but recently been removed from the field. By washing away adobe bricks gathered from various localities in this state and Lower California, Mexico, Prof. George W. Hendry, of the Agronomy Division of the College of Agriculture, University of California, identified numerous grasses, grains, and weeds that had been used in the brick, and thereby added materially to the historical knowledge of the agronomy practiced in these regions a hundred years ago.[24]

TABLE 3

The Effect of Admixtures on the Compressive Strength of Puddled Specimens of Yolo Loam Soil

Admixture	Proportion of admixture to soil by loose volume measure	Initial moisture content, per cent	Method of puddling	Volume weight, pounds per cu. ft.	Compressive strength, pounds per sq. in.
None	.....	12.9	Tamping	106	158.5
Marysville sand	1 : 4	13.2	Tamping	116	167.5
Putah Creek gravel	1 : 4	13.2	Tamping	122	164.5
Putah Creek gravel	1 : 3	14.3	Tamping	124	108.0
Hydrated lime	1 : 4	11.4	Tamping	109.5	198.0
Oat straw	1 : 5	12.0	Tamping	107.5	284.0

Various chemical admixtures have been suggested usually based on the theory of flocculating the soil colloidal material and so reducing the tendency to shrinking.[25] Lime is one of the materials most commonly suggested. In some rammed earth test specimens a 1 to 4 mix of hydrated lime and a clayey loam soil gave compressive strengths approximately 25 per cent greater than those of the natural soil (see table 3).

COMPUTING VOLUME OF EXCAVATION NECESSARY TO PROVIDE THE WALL MATERIAL

It is sometimes advisable before starting actual construction to compute the amount of excavation necessary to provide soil for the erection of the walls. The volume of the walls can easily be determined from the plans of the structure by multiplying the thickness by the length, and the product by the height of the walls, and subtracting the volume of the openings. The volume so determined, however, does

[24] Hendry, Geo. W., and Margaret P. Kelly. The plant content of adobe brick. Quart. California Hist. Soc. 4:361–365. 1925.

[25] Botkins, C. W. The influence of flocculation on the compression strength of Gila clay loam. Agr. Engr. 8(9):252. 1927.

not represent the volume necessary in the excavation, because the earth when puddled for placing in the wall is compacted more than occurs naturally in the ground. The exact amount of the compaction, or the per cent of the shrinkage which results, varies with different soils, in the various methods of handling, and also with the amounts of stones and organic matter thrown out; but it is advisable to estimate the excavation as 25 per cent more than the volume of the walls. Thus it can readily be seen that a relatively small basement area will provide soil enough for the walls of a house (see fig. 3).

STRUCTURAL DESIGN OF THE WALL

In any building work where materials with certain minimum requirements as to durability, strength, fire safeness, and the like are used, the results obtained in the structure and the satisfaction it will give in use depend not so much on the selection of the material as on the way in which it is used. A knowledge of the material to be used, of the forms of architecture to which it is best suited, and of the general principles of architecture and construction is necessary for the best results.

Because of the characteristics of the adobe material and the manner of its use, certain modifications of standard construction practice are necessary and new types of construction technique will have to be developed in its use. It is advisable that these features be carefully studied and planned for in advance.

Integral Reinforcement.—The great majority of earth wall structures are erected with no reinforcement except the straw or other binding material which may be mixed intimately with the soil as it is prepared. Some builders, however, believe it wise to place in the walls as they are erected steel rods, barbed wire, woven wire fencing, or rough wood battens laid horizontally or vertically. Others believe that the puddled soil shrinks away from such materials and fails to develop the bond necessary for securing increased rigidity.

The reinforcing value or the relative efficiency of these various devices would be difficult of exact determination. Such reinforcements appear, however, to have some value. One modern residence in El Centro, Imperial County, so reinforced, has survived rather severe earthquake shocks without damage. This structure is built with 12-inch walls of $4 \times 12 \times 18$-inch sun-dried brick, with three strands of barbed wire laid horizontally in every third mortar joint and with $\frac{5}{8}$-inch iron rods 36 inches long spaced 3 feet apart and driven down through every six courses of brick.

A practice which would appear to have merit is that of using a 6-foot width of 1-inch mesh, 18-gauge chicken wire, laid in every sixth mortar joint of sun-dried brick construction, the edges being allowed to hang down on either side and stapled with the 2-inch staples to the wall faces for a plaster and stucco reinforcement. For a 12-inch wall, with 4-inch bricks and a ½-inch mortar joint, a 6-foot wire width placed in every sixth mortar joint will lap two or three inches on either side of the wall over the wire below.

It is sometimes recommended by builders that barbed or woven wire be placed between courses of poured adobe or rammed earth constructions, particularly around the corners, in order to help obviate vertical cracks.[26]

Wall Thickness.—Where an earth mixture is used as a bearing wall, a minimum thickness of twelve inches is advisable because of the structural strength of the material. In the rammed earth method walls less than 9 inches in thickness have been found to induce construction difficulties, in that the closely spaced forms make tamping difficult. For non-bearing walls, such as some partition walls, garden walls, and the like, thicknesses of eight, six, and even four inches, have been used.

For two-story construction it is recommended that the first-story walls be not less than eighteen inches thick and the second-story walls a minimum of twelve inches.

Wall Heights.—Although there are examples of earth wall structures which exceed two stories in height, this is believed to be a practical limit for modern construction. In regions subject to earthquakes or severe wind, one-story construction is advised.

Where walls one foot thick rise more than ten feet between floor and ceiling, cross walls or buttresses should be introduced to stiffen the wall every ten feet of its length. Gable ends may be erected of earth and should be well tied to the roof framing.

Wall Foundation Courses.—One of the necessities for a durable earth wall is a strong, watertight foundation raised sufficiently above the outside grade to protect the wall against moisture, particularly the splash of water dripping from the roof. Where low foundations have been used, no roof gutters provided, and no waterproofing placed on the exterior of the wall, it is not uncommon to see the lower foot or so of the wall eroded.

In several examples of earth-walled houses in this country, the walls rise from the ground surface or from a shallow trench without

[26] Ellington, Karl J. Modern pisé building, p. 36. K. J. Ellington, Port Angeles, Washington. 1924.

a foundation of harder material for a waterproofing layer. Where the site is well drained, and surface water is prevented from running against the foot of the wall, this may prove a satisfactory construction for temporary or semi-permanent structures. For the better class of residence construction, however, it has been found that without damp-proofed foundations the moisture conducted up through the wall discolored the interior wall finish for some distance above the floor, made a damp interior, and rotted out the floor timbers.

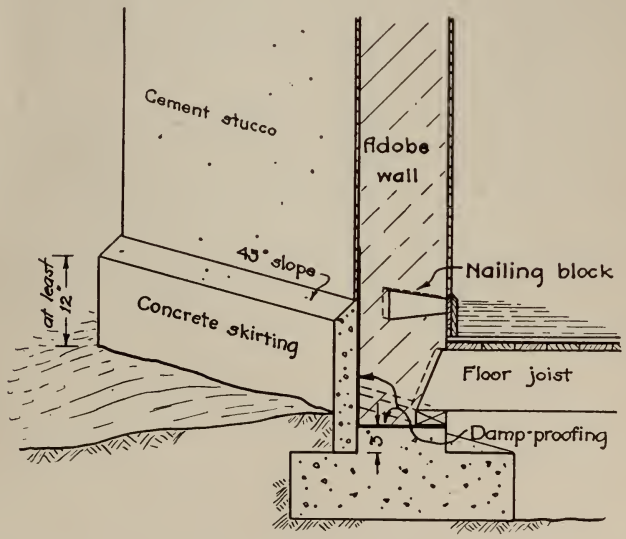

Fig. 19.—A type of concrete foundation which may prove economical for some work. The raised portion of the footing immediately under the wall is to provide a ledge to hold the wall form when starting the first wall course. For adobe brick construction, where no wall form is required, the footing may be a flat slab. The tar damp-proofing is applied to the face of the wall behind the stucco and concrete skirting. The skirting is poured after the wall is erected. The floor joists may be buried in the wall as shown, or supported on the foundation as shown in figures 21 and 25. The triangular nailing block sketched is suitable only for use in the rammed earth and poured adobe methods. An adobe wall should not be carried below grade unless special precautions are taken to protect it from external moisture.

Where a temporary structure without masonry foundations is desired, a wide trench should be dug into the sub-soil and the trench bottom solidly tamped. A damp-proofing such as a thick paint coat of tar should be applied to the trench bottom, and the adobe wall erected to a height of at least a foot above grade, where a layer of the damp-proofing is carried across the top and down either side to the bottom. This procedure should help to protect the earth wall against the entrance of moisture and against the splash of water from the eaves

(see fig. 30). A concrete splash apron sloping away from the base of the wall is a good feature to add to such footings.

Where a foundation is used, monolithic concrete is considered preferable to any other material because of its durability and the fact that it tends to span any small areas of sub-grade settlement. Where there is any possibility of the sub-grade being insecure, the concrete should be reinforced. Because the earth wall is heavy it is advisable, if the bearing soil is soft, to make the width of the foundation footing three times the thickness of the wall.

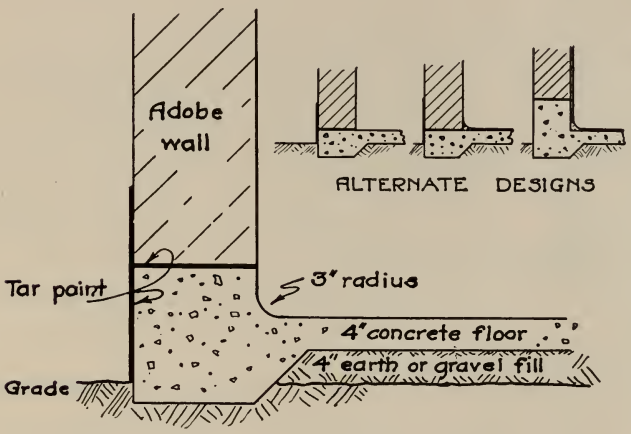

Fig. 20.—An economical foundation where a concrete floor is used. If the wall is to be of sun-dried bricks, so that the ledge above the floor will not be necessary to hold the wall-form for the first course of the wall, and if no water will be used on the floor, the ledge may be dispensed with and the floor continued straight out to the outside edge of the foundation. Wire mesh concrete reinforcing, laid over the entire floor area as the concrete is poured, will materially aid in preventing cracks.

Since a concrete foundation equal in thickness to the wall and carried a foot above the grade line is a relatively expensive construction item, various attempts have been made to design a foundation requiring a minimum amount of material. Where a concrete floor is being used in the building, the foundation need, perhaps, not be carried more than a few inches below the fill into the original ground (see figs. 8 and 20). A damp-proofing paint course or a plaster dado (see fig. 34), should be carried two feet above grade if stucco is not used on the exterior wall of such designs. Another design, satisfactory if the vertical joint between earth wall and concrete skirting is made watertight, is shown in figure 19.

Waterproof Course.—To avoid the conduction of moisture from the ground into the wall, a waterproof course of tar paint or asphalt

roofing should be applied to the top of the foundation before the wall is started. Where no foundation is used, the waterproofing should be placed in the bottom of the trench excavated for the wall, up over the sides of the wall to a height a foot or more above grade, and through the thickness of the wall at that height as described in the previous section on foundations.

Preventing Dry Rot and Termite Damage.—Precautions should be taken to prevent dry rot and termites ("white ants") from attacking the timbers used in conjunction with the earth walls.

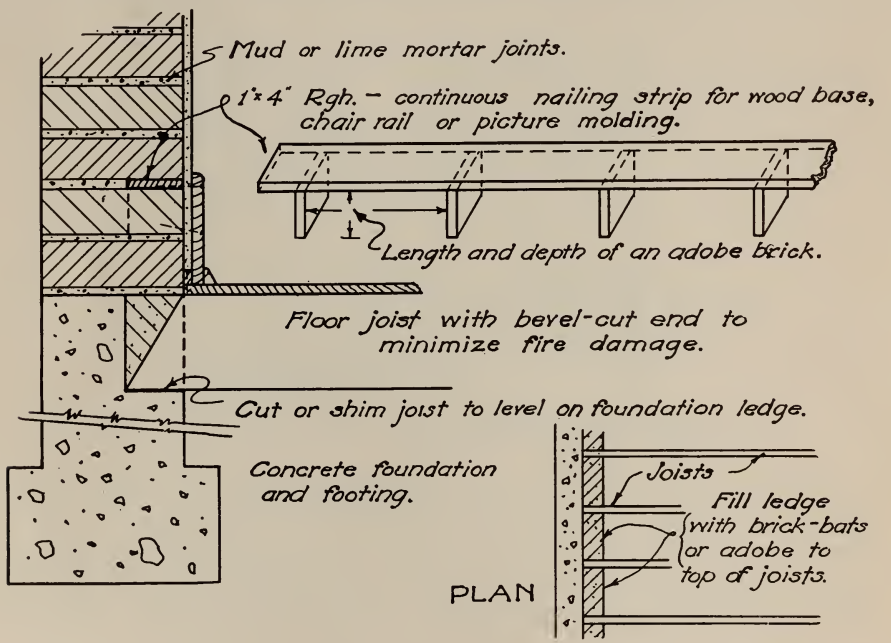

Fig. 21.—Alternate floor detail for adobe brick construction and a continuous nailing strip detail. (Courtesy E. D. Herreras.)

Dry rot is a fungous growth that attacks wood. Since moisture is necessary to the growth of the fungus, adequate water-proofing at the foot of the wall will largely overcome the possibility of attack. Wood members lying on the concrete foundation or in the earth wall near the ground level should be treated with a wood preservative before they are put in place. No wood members should be permitted to rest directly on the ground. Leaving a minimum of 12 inches air space between the bottom of the floor joists and the ground, and ventilating this space with a 6 by 18-inch screened opening on each side of the building, are also advisable.

Termites, though they have never been known to tunnel through earth walls, have been observed to erect their sheltering tunnels over

the outside of the walls into roof members. Metal shields properly placed along the tops of concrete foundations would prevent this infestation. Where termites are known to exist, all scrap lumber should be cleared from under the floor area, and all floor timbers exposed on the under side should be treated with a wood preservative.

More complete information on precautionary measures is available in publications devoted to dry rot[27] and termites.[28]

Openings for Windows and Doors.—It is usually considered that the forming required to block out a window or door opening requires more time and labor than if the wall were solid. Fastening the door and window frames into the wall also presents a problem because of the low tensile strength of the material and hence the relatively slight holding power of the wall for inserts and ties. For this reason and also because of rough usage often given these parts of the structure, particular care should be taken to secure tightly fitted frames.

The frames for openings are usually built in place in the sun-dried brick walls, but with walls erected by the other methods it is frequently preferable to block out the opening with a temporary frame and make provisions for putting in the finish frame later. This procedure involves burying in the wall, at the time of erection, nailing blocks to which the frames can be fastened. Such nailing blocks should be 2 by 4 inches or larger, should extend 12 inches or more back from the door opening, and should lie as near the center of the wall thickness as possible. A cross-piece nailed to the buried end of the block will fix it more solidly in the wall. A vertical 2×4 timber, buried in the wall at the side of the opening and secured with blocks or metal ties extending back into the wall, is sometimes used (see fig. 22). Corrugated metal strips like those used in standard brick work are satisfactory for this purpose.

Another method sometimes used to fasten the frames to the wall is to bury long bolts with large washers as the wall is erected, leaving enough of the end exposed to secure the rough frame. Nailing through the frame with large spikes to reach into the earth wall, and nailing bent metal ties which extend into the wall on the back of the frames, are methods also in use.

Care should be exercised to make a tight joint between the frame and wall in order to exclude drafts and moisture.

---

[27] Hunt, George M. The preservative treatment of farm timbers. U. S. Dept. Agr. Farmers' Bul. 744:1–32. 1916.

[28] Snyder, T. E. Preventing damage by termites or white ants. U. S. Dept. Agr. Farmers' Bul. 1472:1–22. 1926.

Light, S. F. Termites and termite damage. California Agr. Exp. Sta., Cir., 314:1–29. 1929.

A lintel is usually built into the wall to support its weight above the opening (see fig. 23). This lintel should be the full width of the wall and should have a minimum of nine inches of bearing on either side of the opening. Because of the tendency of all earth walls to shrink as they dry out, a shrinkage amounting to as much as one inch

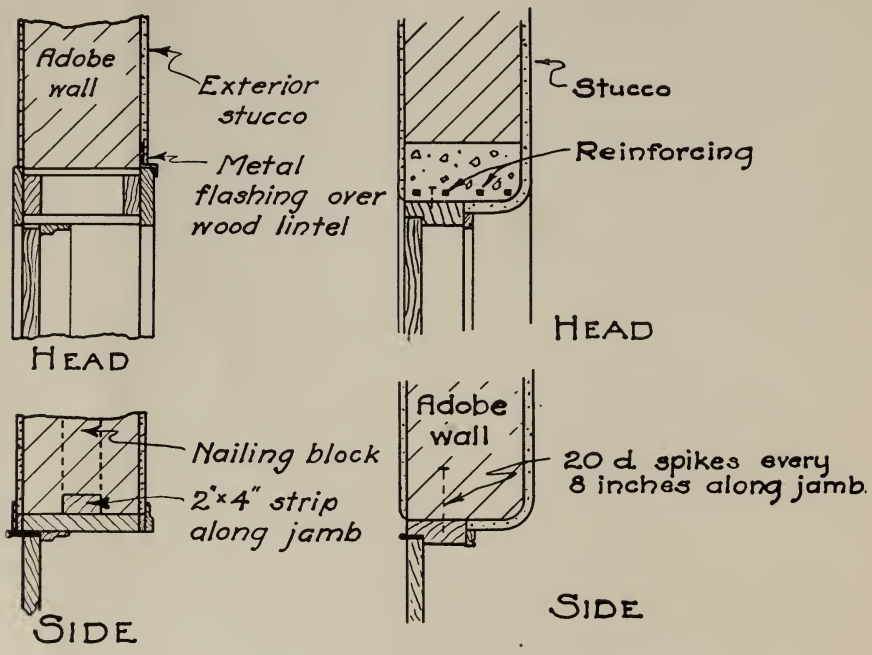

Fig. 22.—Two details of lintel and jamb construction for door openings. At the right is a concrete lintel and rabbeted jamb, the latter held in place by spikes extending into the wall. This method of support is more suitable with sun-dried brick construction than with any of the other wall construction methods.

At the left is a detail of a built-up wood lintel and wood frame extending through the wall thickness. The nailing block and vertical strip set into the wall should be placed in position when the wall is erected; the jamb members may be placed then or later, as desired. There should be at least three nailing blocks on each side of the opening, extending 18 inches or more into the wall.

All vertical members placed when the wall is erected should be cut approximately one-half inch short to allow for the settling of the wall, otherwise they will not allow the lintel to settle with the wall and will cause cracks above the opening.

for every ten feet of height, it is necessary to place the lintel above the height desired for the finish frame an amount depending on the height of the opening.

Self-supporting arches may be erected, sun-dried brick being used; but such arches complicate the building of the frame and should not be attempted unless constructed by experienced builders.

Providing for the Roof Loading.—Because of the low tensile strength of the puddled earth material, the walls will not withstand lateral or outward thrusts. For this reason the roof trusses must be so designed that they will impart only vertical loads on the wall; they must be so well tied as to have no tendency to spread (see figs. 25 and 26).

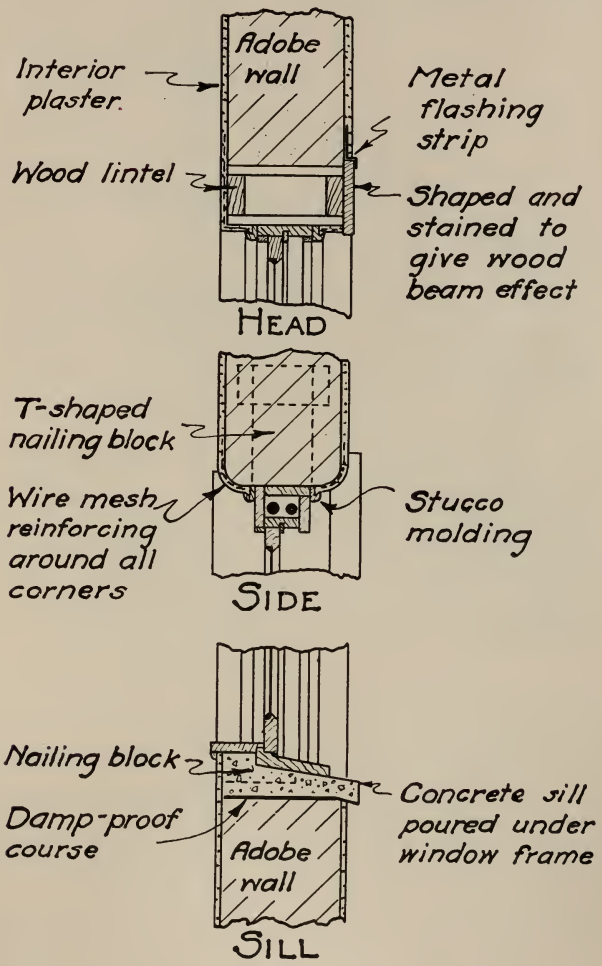

Fig. 23.—Typical detail for a double-hung window set midway of the wall thickness.

For the best construction it is advisable to place a reinforced concrete collar beam at the top of all earth walls (see fig. 25). This provides a continuous reinforcement or tie around the wall and also gives a secure means of fastening the roof to the wall. When the earth wall has come within six inches or a foot of the height desired in

the wall, it is smoothed off to an approximately level surface, and 20 penny spikes are driven half their length into the top of the wall, spaced six inches to a foot apart, and staggered across the width of the wall. These provide a tie between the earth and the concrete, which is poured in a continuous layer around the perimeter of the wall, a minimum of six inches thick. Two ¼-inch reinforcing rods should be

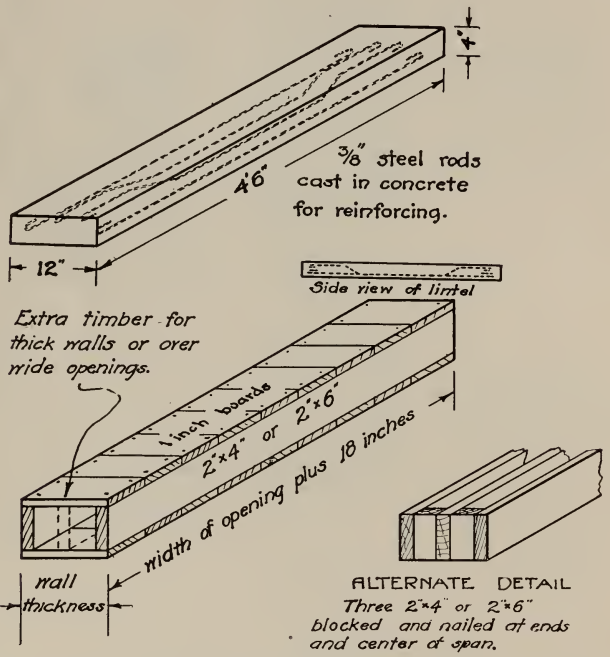

Fig. 24.—Lintels are used to carry the load above door and window openings. The upper detail shows a reinforced concrete lintel for a three-foot-wide door or window opening in a wall 12 inches thick. The lintel is long enough to extend into the wall nine inches at either side of the opening. Four reinforcing rods are used, the two inner being bent up at 45° one foot either side of the center of the lintel. The reinforcing should be so placed as to be just one inch from bottom (and top) surfaces of the concrete slab. The concrete for the lintel should be mixed in the proportion 1: 2 : 3. The completed weight of the lintel shown will be approximately 225 pounds.

Two designs for built-up wood lintels are shown in the lower detail. Solid timbers, such as discarded but sound railroad ties, are sometimes cheaper than built-up lintels. Struts should be placed under all lintels when building over them by the rammed earth method, in order to minimize vibration. Wood lintels can be covered with metal lath and plastered if desired.

placed in the concrete, one near each face of the wall, about the center of the concrete layer and an inch from the outer face. These rods tie the beam together and strengthen it against lateral thrusts. Standard reinforcing rods should be used; barbed wire, woven wire, steel cable, and strap iron are not good reinforcements. Before the concrete has

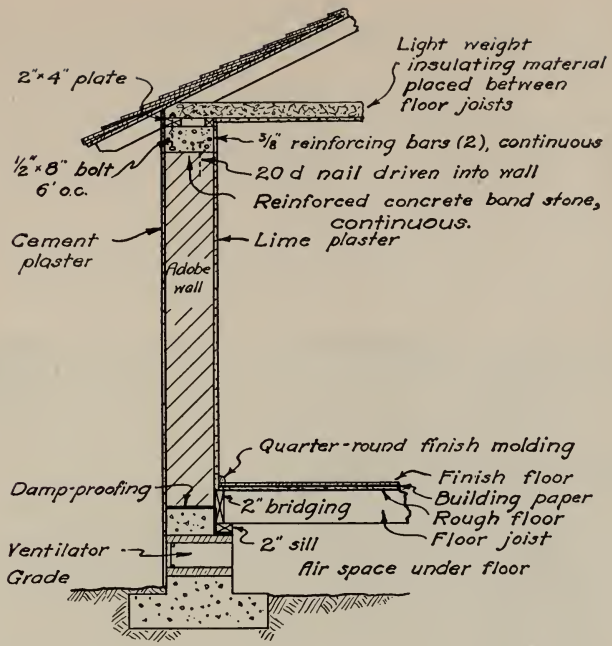

Fig. 25.—Cross section of adobe wall construction, showing typical concrete foundation and collar beam, an insulated ceiling, and a light-weight roof of standard construction. There should be at least one screened ventilating opening of one-half square foot cross-section area on each side of the structure, placed through the foundation as shown. Such ventilation under the floor obviates possibility of buckling of the flooring, or dry rot of the floor joists. The concrete for both foundation and collar beam should be of 1:2½: 4 mixture. The 2-inch sill supporting the floor joists should be bedded in a concrete mortar to level on the foundations. Some builders dispense with the sill and wedge under the joists to level.

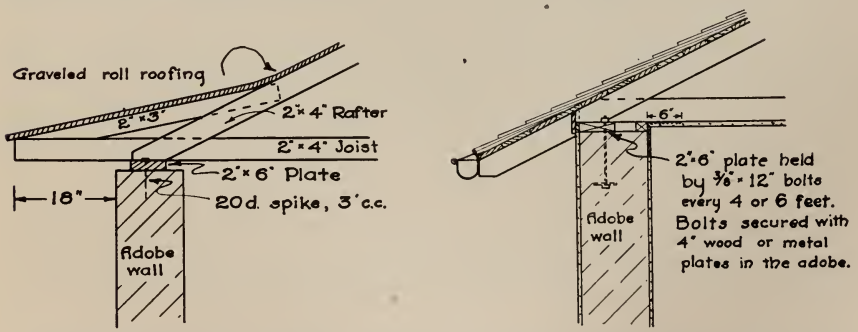

Fig. 26.—Details of cheaper roof plate designs where reinforced concrete bond stones are not used along the top of the adobe wall. A continuous strip of metal lath 12 inches wide, bent around the corner between wall and ceiling as shown in the detail to the right, will prevent corner cracks.

At the left is shown a detail of a construction which transmits the roof weight to the center of the wall and gives an interesting roof line. Bolts buried in the adobe wall should be used to fasten the plate in regions subject to high winds.

set, bolts with large washers should be buried every four to six feet along the top of the beam, with enough exposed to hold a 2-inch wood plate. Fastening the roof members with spikes or lag screws to a plate so secured is one of the surest means of tying roof and wall together.

In case the concrete collar beam is not desired, the wood plate member should be fastened to the earth wall by long bolts with large washers buried ten inches or more in the wall. A variation of this method is to bore 2-inch holes down 10 inches from the top of the wall with a soil auger and set the bolts in these holes in concrete. Wire ties



Fig. 27.—Earthquake damage, Calexico, California, January, 1927, showing that well-built adobe walls can withstand earthquakes without being destroyed. In these structures, however, the heavy tile roof of the bungalow and the second story of adobe in the apartment house violate good design practice for regions where earthquakes may occur. A few one-fourth inch cracks and some crushed adobe brick where partition walls had pounded against outer walls constituted the main structural damage. One minor crack was the only apparent damage in the second-floor walls of the apartment. Good concrete foundations and the use of concrete bond stones at the tops of the walls (and at the second floor level in the apartment) undoubtedly minimized the damage. There was no integral reinforcement in the walls. The stucco was applied over nails driven into the adobe walls and had to be completely removed and replaced except on the second-story walls of the apartment. The interior plaster suffered damage similar to the stucco.

put in place across the wall a foot or more from the top as the wall is erected, and then bent up and over the plate, and spikes driven down through the plate into the wall, are sometimes used on small, cheap structures.

Designing Walls to Increase their Resistance to Earthquakes.—Earth wall construction is inferior to most standard construction materials in earthquake resistance. Well-built adobe structures do not disintegrate so readily under earthquake shock as is commonly believed (see figs. 27 and 28); but where earthquake resistance alone

is the deciding factor other materials known to be superior for this purpose should be employed.[29]

If a builder desires to erect an adobe structure in a region subject to earthquakes, serious consideration of each of the following design features is advised. Skillful and intelligent workmanship is also much to be desired.

a. The plan of the building should be compact and regular. One-story construction, with exterior walls not less than 12 inches thick, is recommended. If a second-story is added, the first-story walls should be not less than 18 inches thick, the second-story should be not



Fig. 28.—Earthquake damage due to poor design and construction, principally the lack of a foundation and of a bond stone at the top of the wall. The structure was being salvaged when the picture was taken by erecting wood studs inside to support the roof. The adobe walls were to be tied to these studs to form a veneer wall. Calexico, California, January, 1927.

less than 12 inches, or may preferably be constructed of light, well-braced wood frame. Bearing walls should not exceed 30 feet in length, unless intercepted at intervals of 30 feet or less by earth or masonry cross walls at least 8 feet long.

b. A substantial one-piece foundation is essential, and is best provided by reinforced concrete laid on a dense sub-grade.

c. The puddled earth material used in the wall should have a minimum crushing strength of about 500 pounds per square inch.[30]

d. Mud mortar of such composition and consistency that it will dry to a hard, dense mass is suitable for construction of pre-cast units. Lime and cement mortars may also be used.

---

[29] Long, J. D. Adobe structures for earthquake regions. Agr. Engr. 8(7): 173–175. 1927.

[30] This is the value specified in the Santa Barbara building code of 1926.

e. Integral reinforcement of the wall is advisable.

f. Window and door frames should be firmly anchored to the walls.

g. Partition and adjoining walls of other materials should be of light construction to avoid such rigidity as might crush or displace the bearing walls of earth by oscillating at a different period.

h. Cross pieces for the roof and upper floors, or members at right angles to them, should be so anchored to the walls at six-foot intervals as to provide a cross-tie for each wall at the ceiling line.

i. Ceilings of wall-board, lumber, or sheet metal are preferable to those of plaster, as there is less danger of their dropping from position.

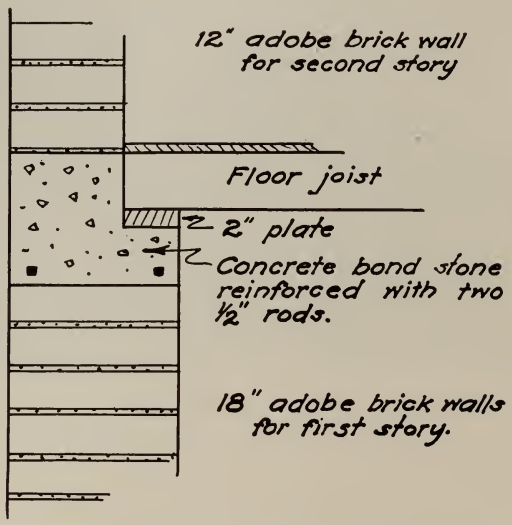

Fig. 29.—Detail of concrete bond stone at second floor level.

j. A continuous, reinforced concrete bond stone of six-inch minimum depth should be placed on top of, and bonded to, all earth walls. Such a bond stone should also be used at the top of first-story walls where a second-story is added (see fig. 29).

k. The roof trusses should be so designed and constructed as to impart no side thrust; they should put only vertical compression loads, evenly distributed, on the wall.

l. Roofs should be of light weight, and firmly anchored to the walls.

m. A good protective covering should be used on the exterior of the walls to prevent excessive weathering, particularly at the ground line. Lime and cement plasters and stucco should have a wire netting reinforcement (18-gauge minimum), well stapled to the earth wall with 2-inch staples.

PLANS FOR ADOBE STRUCTURES

In any type of building work it is always advisable to plan the structure carefully (see fig. 30), before the actual work of construction is undertaken. Careful planning is even more necessary for adobe structures than where the more common construction materials are used, because the workmen will naturally find it somewhat harder to adapt their methods to the new material. Also it is more difficult to fasten the earth materials together and to secure other materials to them, and so it is harder to make corrections, alterations or additions.

METHODS OF FINISHING WALLS

Most earth walls are sufficiently soft and porous to dust off when brushed against and to absorb water coming in contact with them. For this reason it is advisable to put on the walls, both interior and exterior, a protective coat which will provide protection against mechanical wear and, on the exterior, against moisture.

The damage done to a bare earth wall when rain falls against the vertical surface is very slight; destruction results if water is permitted to soak down into the wall from the top, or to splash from the eaves and undermine the wall at the bottom. A tight roof and a high foundation or exterior coating at the base of the wall to prevent undermining are essentials for permanent construction. A wide overhang to the roof and an eaves trough to prevent roof drainage from dropping at the foot of the wall are advantageous. Copings, cornices, exterior trim, and frames of all openings should be designed to carry the water away from the wall.

The various materials which have been applied as finishes to earth walls may be listed under the headings: plaster and stucco, paints, and whitewash. None of the finishes should be applied until the wall has thoroughly dried out. It is usually advisable to wait at least two months after the completion of the walls before applying finish coatings. Under California climatic conditions this delay should give sufficient time for the wall to reach an "airdry" state.

Plaster and Stucco.—Mud may be plastered against earth walls in the same way that cement and lime plasters are applied, and usually adheres much more closely than these standard plasters. Earth from the same source as the walls may be used, provided it has been carefully screened to remove small gravels which would "tear" the plaster under the trowel. Where the soil is a clay or a clayey loam, screened

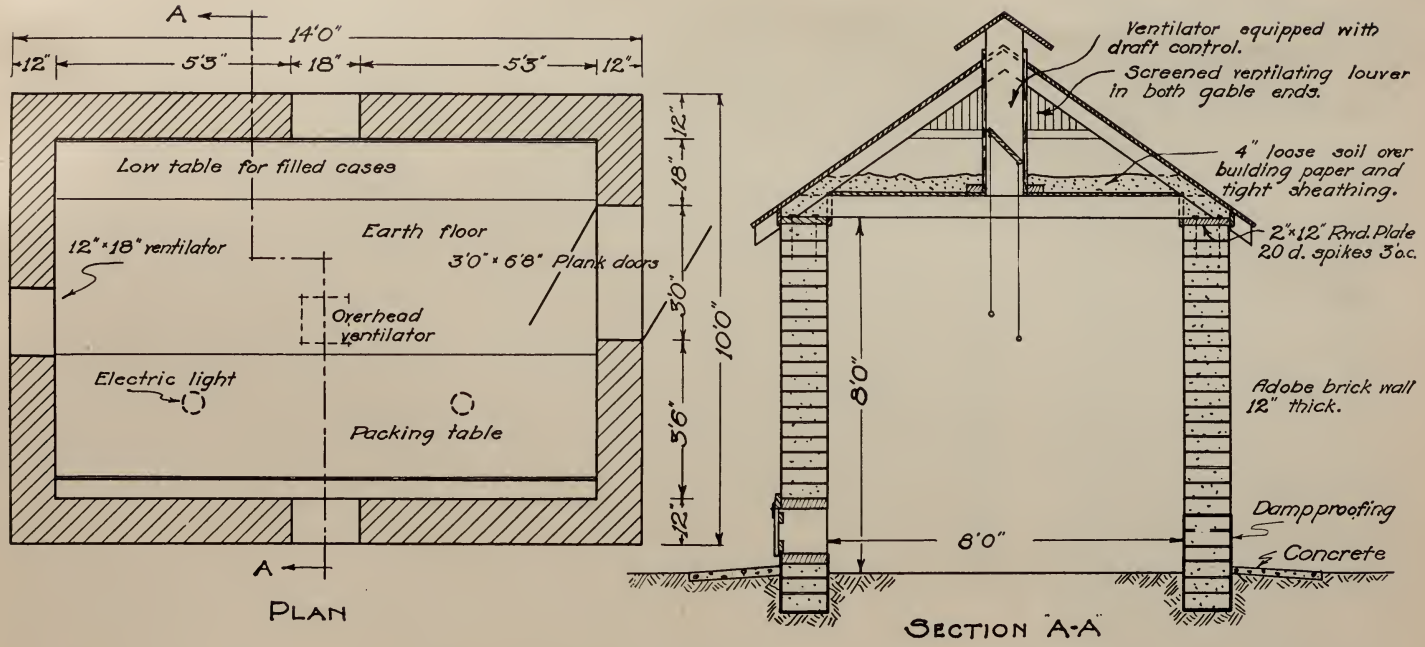

Fig. 30.—Plans for an egg-storage house or similar small structure of adobe brick. An insulated ceiling, ventilator opening in the gable ends, ceiling ventilator, and small openings near the floor to admit the cool night air are all aids to keeping the interior cool. A floor plan and cross-section sketch of the structure are the only plans required for such a building.

sand must be mixed in to break the tendency of the mud to crack in drying. The proportion required for best results can only be determined by experiment with the individual soil in question.

Lime plasters are used directly on earth walls; and if the wall is slightly rough and care is taken to work the plaster firmly against the wall, there is usually no difficulty about its adhering. Lime plasters should not be used for exterior walls, because they are subject to washing by the rains.

Cement stuccos have been most widely used as exterior finishes in this state and are probably the best where both water tightness and resistance to mechanical wear are desired (see figs. 10, 33 and 34). In almost all instances, however, there is difficulty in getting the cement stucco to adhere to the natural earth surface even when it has been roughened prior to the application. Apparently because of the difference in thermal expansion of the cement and earth or the moisture absorbed by the stucco, the two materials separate after a short period of exposure, leaving the "skin" of stucco standing unsupported. This frequently breaks and comes from the wall in large slabs. There appears to be little or no difficulty of this nature on interior walls.

Reinforcing and better workmanship in application are recommended to overcome this fault. Fastening metal lath or one-inch mesh, 18-gauge poultry netting to the wall surface with large staples gives a reinforcement for the stucco even if it should loosen from the wall. Another method of tying the stucco is to drive eight-penny nails into the walls, spacing them about six inches apart and leaving one-quarter inch of the head exposed to bond to the stucco. Countersinking the nails by striking the wall with the hammer and driving the nail in the depression so formed obviates the difficulty of plastering over the nail heads protruding from the wall. Wire ties laid in the joints as the wall is erected may be used to hold the wire reinforcing. Some builders bury sharp stones and broken bits of tile in the outside of the mortar joints of sun-dried brick construction to bond the stucco.

Reinforcing need not be used on interior walls, but all adobe wall edges and corners, including ceiling corners, should certainly be reinforced by bending a six-inch strip of metal lath around the corner and nailing it with eight-penny nails to the adobe walls. Similar reinforcement should be given exposed edges on the exterior. For the best work this reinforcement should be used in addition to any wire reinforcing placed over the face of the wall.

A few contractors appear to be successful in getting stucco to adhere to the walls by carefully raking out the mortar joints of

sun-dried brick work to a depth of one-half inch or scoring the sides of other earth walls to the same depth, and then throwing and firmly troweling the stucco into the depressions so formed. Sun-dried brick with the special plaster groove cast on the side which was described in the section on methods appear to give little difficulty in this regard. Mixing not more than 10 per cent of lime with the cement for the stucco increases the workability without materially decreasing the strength. Two coats of cement plaster of 1 to 3 mix and a third coat of stucco are recommended for the best work.

In one known instance where there was no roof overhang, a very heavy rainstorm wetted the stucco to such an extent that moisture was conducted through the wall and showed as damp spots on the interior plaster. Two coats of liquid stucco waterproofing applied to the stucco corrected this fault.

Paints and Liquid Waterproofings.—A number of paint compounds have been applied to the natural earth walls with some success. These include the common oil and lead paint, a mixture of equal quantities of light mineral lubricating oil and linseed oil, a mixture of kerosene and linseed oil, proprietary waterproofing paints, gypsum plastic paints, and tar paints. All but the last-named have been used on the interior as well as on the exterior walls. A standard glue or commercial sizing, or a diluted linseed oil is sometimes applied to the wall as a first coat to decrease the amount of finish material required and to give a firmer surface to work on.

The paint compounds give finishes relatively easy of application and renewal. Their chief disadvantages are that they do not provide so firm a coating against mechanical wear as do the stucco and plaster coats, and that their length of life is uncertain because there are no tests to indicate what may be expected of their wearing qualities over a period of years.

Liquid waterproofing solutions to be sprayed or brushed on to the wall have been suggested as cheaper finishes. These include a solution of silicate of soda, hot coal-tar pitch, or asphalt, or a solution of bitumen, resin, or paraffin wax in light oils. The duration of the wearing period of these materials is also uncertain. Because of their relative cheapness and ease of application, renewal, if necessary after three to five years, may prove an economical procedure.

Whitewash Applications.—In most of the ancient work and in much of the modern, a coating of whitewash, renewed each year, is the only finish given to earth walls. It is not uncommon, in desert locations, to hear of the Indian and Mexican builders mixing in cactus juice to make the whitewash coating more permanent. The

same objective is accomplished in our present day formulas for whitewash which specify glue or skim milk as one of the ingredients[31] (see frontispiece and fig. 31). In some of the modern work a wash of cement and water, mixed to a cream consistency and applied with a brush, has served as a temporary finish.



Fig. 31.—The stables on the Libby Estate, Ojai, California, provide a good study of simple architectural treatment and whitewashed walls. (Wallace Neff, architect.)

Wall Papers and Canvas Coverings.—Wall papers, and various wall paper substitutes, have been successfully applied to earth walls for interior finishes. The details of application are similar to those for the application of wall papers over lime-plastered walls. If the surface of the wall is uneven, it may be brought to a smooth, even surface by a mud plaster coat. The actual details of hanging the wall paper vary but little from standard practice.

The wall is first sized with a glue or commercial sizing, two coats being required on the more porous surfaces. The sizing fills the pores between the soil particles, binds the particles together, and gives a firm surface for the additional treatments. After the sizing is dry, the paper is hung, using the paste and methods common to the paper-hanger's trade.

Canvas makes a particularly attractive and suitable finish for earth walls, the weave of the fabric giving a pleasing texture and the strength of the cloth resisting cracking and mechanical wear. Light weight canvases may be used. After the wall has been sized, the canvas is applied similarly to the hanging of wall paper, using glue to secure it. A paint coating on the canvas wall gives a pleasing finish.

[31] Whitewash and cold water paint. Bul. 304-B:1–8. National Lime Association, Washington, D. C.

ADVANTAGES AND DISADVANTAGES OF USING EARTH FOR BUILDING MATERIAL

No construction material can be entirely suitable for all types of structures or all localities; there are always advantages and disadvantages to be considered in making a selection of a material. The characteristics of earth as a building material may be discussed under the headings of availability, labor required for building, strength, costs, durability, sanitation and comfort, and attractiveness.

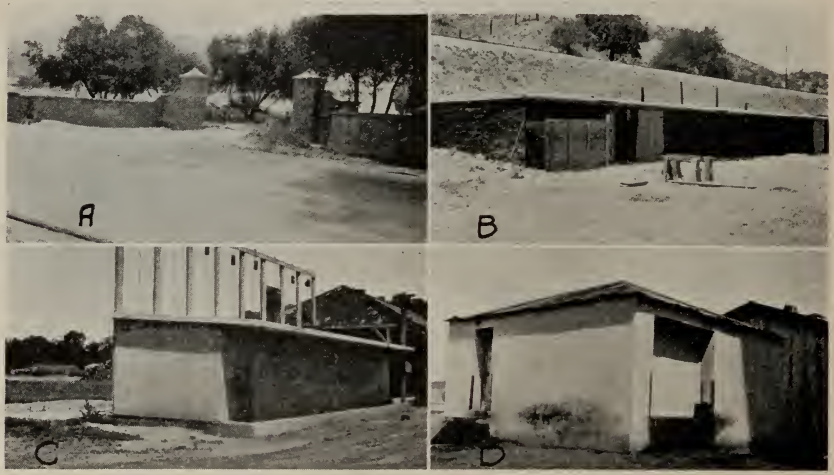

Fig. 32.—Small farm structures of adobe construction. (*A*) Entrance gateway and (*B*) manure pit on the R. H. Baker ranch near Saugus, California. (*C*) The fruit sulphuring house and (*D*) the gasoline and oil storage house on the Kearney Park ranch near Fresno, California.

Availability of the Material.—Not all soils are suitable for earth wall construction, but it appears that most of them can be used in some one or more of the various methods of wall building, thus permitting adobe construction to be used almost universally insofar as material is concerned. A thorough study of the characteristics of the soil available is always necessary before construction work is undertaken. One advantage, of major importance in some instances, is the availability of the material near to the site, which eliminates transportation troubles and costs.[32]

The Erection Labor Requirement.—One of the disadvantages of this form of construction is that it requires a large amount of physical

[32] Pisé de terre mine buildings. Engineering and Mining Jour. 106:615. 1918.

labor. Farm equipment already owned by the farmer and standard construction equipment owned by the small contractor can be used to a slight extent in some of the methods of adobe building, but it is doubtful that any great advance in labor saving machinery will be made unless some contractor secures sufficient work of this nature to justify the expense of the development and construction of special machinery.

Another disadvantage to the person who does not wish personally to undertake the construction work is the difficulty of securing workmen skilled in this form of construction.



Fig. 33.—Adobe is sometimes a satisfactory material for small urban structures. Offices of the Santa Fe Land Improvement Company, Rancho Santa Fe, San Diego County, California. Adobe brick construction with cement-plastered exterior walls. (Requa and Jackson, architects. Photograph by courtesy of Miss Lillian J. Rice.)

Strength Developed in the Completed Walls.—The relatively low structural strength of puddled soil makes it imperative that all major fastenings be provided as the wall is formed. Because it is hard to join new work with old, corrections in the work and additions are difficult and expensive. Other structural materials must be provided to assume tensile stresses, such as occur over door and window openings.

The material is unsuitable for structures where the goods stored within exert lateral pressures against the wall, or where door and window openings make up a very large part of the wall area, particularly if doors are to be hinged or fastened to wall parts in such a way as to put them under tension loads.

Largely because of the low strength, it is necessary to use thick walls. These have many advantages, but they also have the disadvan-

tage of being bulky and increasing the ground (or plan) area to secure the same net floor space inside, thus requiring more expense for foundation and roof.

Costs of the Completed Adobe Structure.—The matter of initial cost of earth wall structures has frequently been mis-stated. Over a wide range of conditions and structures it appears that the first cost of a residence of such construction, including cost items for all labor, commercial materials, and equipment necessary to put the structure in readiness for use, is about the same as for a similar quality wood frame and stucco or weather-boarded structure. Some contractors figure adobe residence building costs as 10 per cent more than wood frame for the same net floor area.

Where the builder desires to utilize his own labor in the building, the cash expenditure necessary can be reduced very materially. One of the chief advantages of this form of construction is that it does permit a "self-builder" to provide shelter with his own labor and a minimum of capital.

Further economies can be effected in the elimination of much wood trim, the utilization of second-hand and second-quality materials, the development of low cost wall finishes, and simplification of the design. For example, second-hand bricks, lumber, doors, etc., from wrecked buildings are sometimes procurable in good condition and at low cost; knotty lumber, rough beams, and imperfectly burned brick will often work in quite as satisfactorily as the more expensive, better quality materials; and adobe may be used for fireplace and chimney, with fire-brick lining for the opening and terra cotta or concrete pipe lining for the flue, at a cash cost materially less than that of standard construction. Most builders, too, are of the opinion that their further work with this material, after the initial effort, can be done much more efficiently and cheaply because of time-saving expedients learned on the first job.

Table 4 gives the results of a survey of costs of typical structures of recent date. It is impossible to make an accurate, generalized estimate of construction costs, because a large part of such costs is for unskilled labor which has a wide range of efficiency. Then too, very few builders keep an accurate record of their costs. Frequently the recorded price is the contract price and so includes the builder's profit. Costs per square foot are not reliable because of the divergence of opinion as to how much of the interior finishing, equipment, and furnishing should be included in the estimate. Basic information on costs is given in the section on the choice of construction method as data on cubic feet of wall erected per man-hour of labor.

TABLE 4

COST OF EARTH WALL CONSTRUCTION

Structure	Size	Erection date	Location	Method	Cost		Remarks
					Total	Unit	
Residence	1140 sq. ft.	1927	Lancaster	Cajon	$ 3,248	$2.85 per sq. ft. of floor area	Includes electric stove, hardwood floors, tile sink and bathroom floor.
Residence	3700 sq. ft.	1924	Phoenix, Ariz.	Adobe brick	50,000	$13.50 per sq. ft.	Contract price.
Residence	40×48 ft.	1925	El Centro	Adobe brick	12,000	6.25 per sq. ft.	Reinforced for earthquake.
Residence	5 room	1926	Sacramento	Adobe brick	5,000	4.00 per sq. ft.	Contract price.
Residence	5 room	1927	Yuba City	Adobe brick	3,200		Cash outlay for bare earth walls approximately 60 cents per lineal foot.
Farm Bureau office	27×70 ft.	1926	Visalia	Adobe brick	2,950	1.56 per sq. ft.	Includes item for all volunteer labor at 40 cents per hour.
Residences	6 to 12 room	1927	Santa Fe Rancho, San Diego	Adobe brick		6.00 per sq. ft.	Average costs.
Residence	18×62 ft.	1927	Farmersville	Poured earth			$198.00 cost of bare adobe walls.
Residence	24×28 ft.	1928	Tulare	Adobe brick	400	.60 per sq. ft.	Cash cost does not include item for owner's labor.
Incubator house	27×120 ft.	1928	Sutter City	Poured earth	1,069	.33 per sq. ft.	Adobe walls cost $441.70.

For outbuildings such as barns, garages, and sheds the probable costs with earth construction, including all labor, is perhaps higher than for standard wood construction. In such structures the cost of the earth wall itself will be low because of the relatively small proportion of area in openings and the straight, simple structural lines. The cost of the exterior walls of such structures represents, furthermore, a larger per cent of the total cost of the structure. But in such buildings the cost competition is with a lighter, cheaper construction than in residence walls.

The Durability of Earth Walls.—As with any other material likely to fall into the hands of careless, incompetent, and ignorant workmen, there are many examples of crude, insecure, and insanitary structures of adobe. Several examples of structures a century or more old attest, however, the fact that when properly used and given the slight attention they require, adobe walls are as durable as can reasonably be expected of any material. One good illustration of this fact is the Palace of the Governors which was erected of adobe brick in what is now Santa Fe, New Mexico, in 1609.[33]

The chief point to be considered to insure the durability of earth walls in small structures is protection against structural defects, moisture, vermin, surface destruction by accident, weathering, and physical or chemical decay.

Lack of a suitable foundation to prevent uneven settlement of the wall and to prevent water and wind erosion at the ground line has apparently undermined many neglected structures. The susceptibility of such walls to destruction from inundation is not so great as might be supposed. For example, a house in Ventura, California, erected in 1857, stood through a day or more of flooding from an adjacent river, and two adobe brick houses in the vicinity of Santa Paula, California, flooded at the time of the St. Francis dam disaster in 1928, suffered no structural damage.[34]

As the weight of earth walls is greater and the tensile strength less than with many of the standard materials, earthquake shocks of equal intensity might reasonably be expected to damage the earth walls more. There are examples of earth structures which have been damaged by the vibration induced by temblors, some wholly wrecked; but there are also structures which have come through quakes of considerable intensity with little or no noticeable structural damage.[35]

---

[33] Twitchell, Ralph Emerson. Old Santa Fe. 43 p. New Mexico State Historical Society, Santa Fe, N. M. 1925.

[34] Fairbank, J. P., and J. B. Brown. Some aspects of the St. Francis Flood damage of interest to agricultural engineers. Agr. Engr. 9:237. 1928.

[35] Soule, Winsor. Lessons of the Santa Barbara earthquake. American Architect. 128(2482):1–112. 1925.

Examples of the latter are to be found in San Francisco, Santa Barbara, Los Angeles, and the Imperial Valley, California. A good foundation, a low design with light weight roof, and a reinforced concrete collar beam at the top of the earth walls are the most important precautions to take against the possibility of earthquake damage.

Adobe construction is fireproof, but only insofar as the earth walls themselves are concerned. Floors, partitions, and roof members will still be subject to destruction by fire unless constructed of non-combustible materials (see fig. 34). There are examples of fires gutting such buildings and leaving the earth walls standing unharmed.

Records of earth-walled structures on the Atlantic Coast and in the mid-west states show such structures to be capable of resisting severe wind stresses occasioned by cyclones and hurricanes.[36]

Sanitation and Comfort of Adobe Structures for Human Occupancy.—There are no absolute standards for housing sanitation and comfort, but earth wall structures are commonly cited for their excellence in this respect. The influence of the thick walls on temperature and humidity is largely responsible for this feature. Other important points adding to the comfort of living in earth wall houses are that they are practically soundproof, dustproof even during heavy wind storms, and markedly free of drafts. All these features are conducive to restful interiors.

Properly designed and constructed earth walls make for dry interiors. In some of the crudest structures without foundations, or without a water-proofing layer in the walls, moisture conducted from the ground has been found sufficient to promote a feeling of dampness.

In some instances of structures near the sea coast where the humidity is high, the cooler air within the structure causes an increased relative humidity and consequently a chill feeling. In but one known case has this action been sufficiently great to pass the dew point and cause actual condensation on the interior of the walls. Opening the house for ventilation and keeping a small fire burning during those parts of the day when the outside air has both high temperature and high humidity are suggested as remedies for this condition.

The fact that earth walls are thick and that the conduction of heat through dry soil is relatively slow, results in the well-appreciated fact that the interiors of earth-walled houses are cooler in summer and

[36] Miller, T. A. Report on the condition of rammed earth buildings built 1820 to 1854 near Sumter, South Carolina. Mimeographed report of the United States Department of Agriculture, Division of Agricultural Engineering. 12p. December, 1926.

warmer in winter than those constructed of standard materials, unless special provision has been made for insulation in the latter. Considered on a unit thickness basis, earth walls are a relatively poor insulating material, inferior to the same thickness of solid wood construction. It is the mass of the earth walls and the fact that they permit little, if any, air filtration, that causes a modification of interior temperatures.[37] Prevention of sharp changes in temperature makes the structures more livable.

Insulation of floor and ceiling is also essential to minimize interior temperature changes, the ceiling particularly requiring attention in this regard. Such insulation should tend to prohibit the passage of heat by conduction and also by filtration of air through the floor or ceiling. Tight construction and the use of standard insulating materials are advised. For some structures a 4-inch layer of dry earth over the ceiling joists will provide an adequate, but a heavy-weight, insulation[38] (see figs. 3, 25, and 30). Diatomaceous earths, available in some localities, afford light weight insulation. The use of a second roof built a foot or so above the first with the space between entirely open has proved an insulation from the heat of the summer sun.

Because earth walls do not lose their heat so rapidly as lighter walls, they may prove unsatisfactory for use in sleeping rooms in such localities as the Imperial Valley.[39] Here a combination of a lower story of earth walls for living quarters and a light frame and screen superstructure for sleeping should prove preferable.

The infiltration of air through walls is a factor of considerable importance in ventilation and heating. In high-quality construction with well built earth walls and tightly fitted doors and windows it

[37] Unpublished data secured by H. L. Belton and J. E. Dougherty of the University of California show that a shed-roof, open-front poultry house with 12-inch adobe walls had approximately 7 degrees less variation, for both maximum and minimum temperatures during the summer and winter respectively of 1928, than a similar house alongside, which had one thickness of tongued and grooved sheathing for the side wall. A temperature lag in the adobe house of approximately 1½ hours behind the temperature variations in the wood house was apparent on days free of wind. A tightly closed front wall and an insulated ceiling would undoubtedly have lessened the temperature variation in the adobe structure still further.

[38] An incubator house erected by the Sutter City Hatchery (see fig. 3) with 18-inch adobe walls and 3½ inches of soil over the ceiling maintained a nearly constant temperature of 65° during the winter of 1928–29, according to Mr. John Lind, owner.

Adobe structures with sand insulated ceilings and equipped with stoves and ventilators have been found very satisfactory sweet potato curing and storage houses in Arizona. See Crider, F. J., and D. W. Albert. The adobe sweet potato storage house in Arizona. Ariz. Agr. Exp. Sta. Bul. **106**:393–410. 1925.

[39] Unpublished data from tests made for the author in the Imperial Valley by J. P. Fairbank in 1926.

has been found advisable to include provision for ventilation by the installation of ventilating flues and manually operated registers.

There are very few cases of vermin or insects working in well constructed earth walls with masonry foundations. Mixing powdered glass or arsenic with the soil used in the lower layer of the wall has been tried in some instances as a precautionary barrier. Hornets have been known to work through mud or lime plaster used on the exterior wall surface.



Fig. 34.—Typical adobe residences in Californiia.

Upper left. Mr. and Mrs. P. T. Smith erected this adobe brick structure for their home near Yuba City, California, in 1927. It served for the demonstration of the local committee which won first prize in the rural communities and small towns competition of the National Better Homes in America contest in 1928.

Upper right. Adobe brick home of Mr. and Mrs. L. W. Taylor, erected near Bakersfield in 1928. A plaster dado is used as a splash guard at the foot of the wall. The exterior walls were given a spray coat of linseed oil diluted with kerosene, and a brush coat of a gypsum plastic paint.

Lower left. Residence on the Kearney Park ranch near Fresno, California, erected of sun-dried brick in 1906. There have been three fires in the interior of this structure. Special precautions were taken in erecting the walls to add to their insulating effect; the interior is said, in consequence, never to get warmer than 80 degrees, even though a thermometer on the porch has indicated outside temperatures as high as 116.

Lower right. An adobe brick residence in Santa Monica, California. (John Byers, architect.)

The Potential Attractiveness of Adobe Walls.—Architects and others with a feeling for the aesthetic are interested in the possibilities of design in earth wall construction. The deep reveals at door and window openings, and the heavy style promoted by the massive wall, have a refreshingly novel appearance.

In general, any of the popular historical styles of residence architecture which make use of masonry construction can be erected with earth walls. The low, rambling styles are more in keeping with the nature of the material (see frontispiece and figs. 4, 10, 11, 31, 33, and 34).

CONCLUSIONS

1. The practical and economical value of earth as a construction material for small structures in California, particularly farm buildings, has been proved through the actual erection and use of such structures.
2. Three methods of incorporating the earth into walls appear practical for use by present day builders in this state: the sun-dried brick, the rammed earth, and the poured earth. All the methods of using earth as a structural material are termed "adobe construction."
3. Any intelligent person familiar with standard construction principles can utilize any of the methods of earth wall construction without fear of failure after studying the peculiarities of such construction and making a few tests to determine the characteristics of the soil to be used. The apparent strength developed in the test specimens and the amount of cracking occurring as the mud dries can be used as an index to the suitability of the soil. Amateur builders should complete the construction of some small structure before attempting any large building project.
4. The selection of the method to be employed depends on the type of soil to be used, the climate, the number of workmen to be employed, and the preference of the builder. The final results secured in the building are similar, regardless of the method employed.
5. Because of the characteristics of the material and the manner of its use, certain modifications of standard construction practice are necessary. A study of the soil itself is the first necessity before any building project is undertaken. The effect of admixtures to the soil, of reinforcements to be placed in the wall, and the design of foundations, roofs, and openings, should be understood.

6. Earth-wall construction is inferior to most standard construction materials in earthquake resistance, but adobe structures have withstood earthquakes in this state with little or no apparent damage. Skillful and intelligent workmanship and the incorporation of certain reinforcing design features will help to minimize the damaging effect of earthquakes.

7. Careful planning is necessary to secure the most economical and satisfactory results with adobe construction.

8. A protective coating should be used on adobe walls to guard against moisture and mechanical wear. Cement, lime and mud plasters, and various paints have been used with success.

9. The advantages of adobe are that it is a native material of adequate strength and durability for residences and small structures, and a material generally economical to use. Attractive, sanitary, comfortable, fire-resistant, dry, sound-proof, and thermal-insulated structures may be erected of the material.

10. The principal disadvantages attending the use of the material are: a large amount of physical labor is involved in such buildings; those not wishing personally to undertake their erection jobs are likely to find it difficult to secure builders skilled in the use of the material; the low tensile strength requires particular care in securing door and window frames; and additions or alterations in the plan after the work is once started are difficult.

11. The cost of earth wall structures varies widely under different conditions. In this state the complete cost of an adobe residence, including items for all labor, commercial materials, and equipment necessary to make the structure available for use, is about the same as for a wood frame structure of similar quality. Economies in the cash outlay required may be effected where the builder desires to supervise and do much of the work himself, or where he is willing to eliminate much of the trim and other decorative features frequently employed in residence design.

12. Adobe construction proves attractive to those builders who desire the novel architecture it affords, to those who have a sentimental appreciation of historic methods or desire to erect a structure directly from the soil, to those who desire to utilize as much of their own labor as possible in the erection, and to those who desire to combine cheapness and comfort in their houses.

ACKNOWLEDGMENTS

The author acknowledges indebtedness to Farm Advisors L. W. Taylor, H. J. Baade, V. W. De Tar, W. E. Gilfillan, and M. A. Lindsay; to Professor C. F. Shaw, Division of Soil Technology, University of California; to Mr. J. P. Fairbank, extension specialist in agricultural engineering, University of California; to Dr. H. B. Humphrey and Mr. James Townsend of the United States Department of Agriculture; and to Mr. John Byers, Mr. E. D. Herreras, Mr. Karl J. Ellington, and many others who have evinced interest in and given assistance in the study of adobe construction. The frontispiece of this publication is a view of the Santa Monica, California, office of John Byers, architect.