Reading and Adjusting a Sextant

Charles W. Thompson, 1887

Selected pages from Manual of the Sextant.

Identify the instrument parts, check the mirrors and index error, and practice reading its graduated arc.

Compiled for The Survival University PDF collection

UNIVERSITY OF
LIBRARY

MANUAL OF THE SEXTANT.

PRINCIPLE OF THE SEXTANT.

A RAY of light impinging on a plane reflecting surface, such as a perfectly even mirror, proceeds in a plane at right angles to this surface, and the angle of reflection is equal to the angle of incidence.

When a ray is successively reflected from two plane surfaces, placed at right angles to a third plane, the angular deviation of the ray will be equal to twice the angle of inclination of the two surfaces to each other.

FIG. 1.

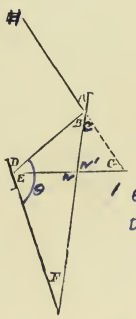

Let a ray of light H be successively reflected from the two mirrors A B and D E; the ray's deviation will be the angle G, the inclination of the mirrors the angle F.

The angle of reflection B = the angle of incidence A.

The opposite angles A and C are equal.

The angle of reflection E = the angle of incidence D.

Then $D = B + F = C + F$, (1)

and $E + F = C + G$, (2) or $D + F = C + G$.

The difference of these two equations gives

$$G = 2F.$$

Suppose two mirrors inclined at an angle of 28°, as in the following figure, a ray of light falling from the star on to the upper mirror is reflected to the lower one, and thence

to the eye; then the total deviation of the ray is 56°, twice the inclination of the mirrors.

Fig. 2.

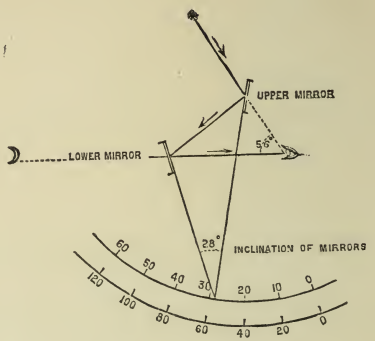

Now if the upper mirror be attached to an index bar, the upper part of which works on a pivot, while the lower end is free to move over a graduated arc adjusted so that when the upper and lower mirrors are parallel the bar points to zero, it is evident that the angular deviation of a ray of light reflected from the two mirrors will be twice the angular distance through which the index bar has moved from zero (see upper arc in Fig. 2); consequently, if the arc be graduated, as all sextants are, to double the angular distance that it actually measures (as in the lower arc shown in the above figure), its indications will correspond with the true angular deviation of a ray that has undergone double reflection from the mirrors of the instrument.

If a portion of the lower mirror be made transparent, enabling the observer to see one object by *direct* vision at the same time that the *reflected* rays from another object enter his eye, the two images may be made to coincide, and the graduation on the arc, indicated by the index bar, will then show the angular distance between the two objects of observation.

THE SEXTANT.

The frame of the sextant is generally made of brass, and should be so fashioned as to combine strength, rigidity, and lightness.

Fig. 3.

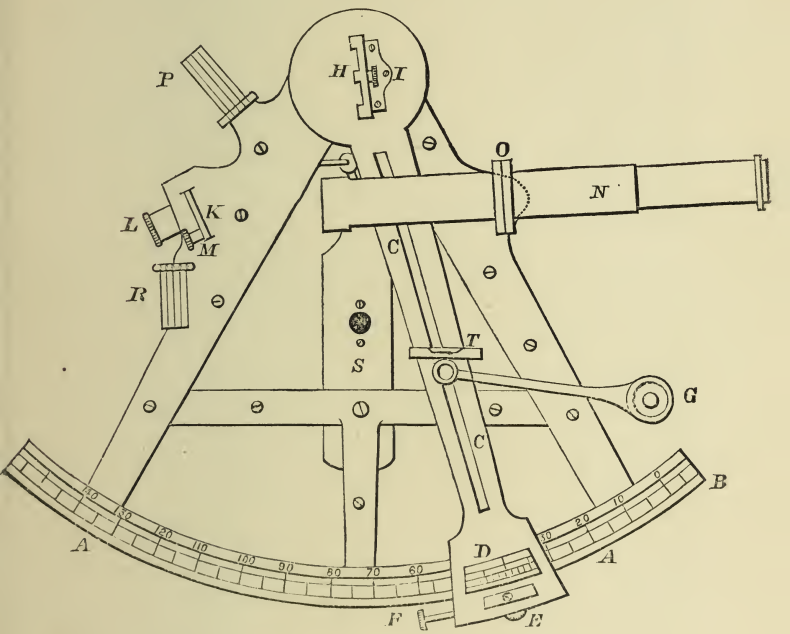

A. Limb or arc.
B. Arc of excess.
C. Index bar or arm.
D. Vernier.
E. Clamping screw.
F. Tangent screw.
G. Reading glass.
H. Index glass.
I. Adjusting screw (covered with brass cap).
K. Horizon glass.
L. Adjusting screw (covered with brass cap).
M. Ditto (ditto)
N. Telescope.
O. Telescope-ring or collar.
P. Index shades.
R. Horizon shades.
S. Handle.
T. Knorre's level.

The *arc* or *limb* (*A*) has a strip of metal, silver or platinum, inlaid and running its entire length; this strip

is carefully graduated, usually to divisions of 10′ (ten minutes) each. The lines should be uniformly fine, distinct, and absolutely equidistant. The graduation runs from 0 (zero) towards the left to about 140°, though in instruments of the usual form not more than about 130° can be read with the vernier. From zero towards the right the graduation is carried some 5°; this portion is called the "arc of excess" (*B*), and is used to ascertain the index error of the instrument; it is also useful in determining small angles of terrestrial objects not far from the observer when instrumental parallax affects the observations. A reading from the arc of excess is usually alluded to as "off the arc," in contradistinction to a reading on the arc proper.

The *index bar* (*C*) is a flat bar of brass pivotted at one end on the centre of the instrument, the point coinciding with the centre of the graduated arc. The other end of the index carries a *vernier* scale (*D*), kept close to the graduated arc by means of a strip of brass, beneath the arc, acted upon by a *clamping screw* (*E*), which regulates the pressure required to fix the index at any desired part of the arc. In connection with the clamping screw there is, at right angles to it, a *tangent screw* (*F*), by which, when the index has been clamped, a further but limited amount of motion can slowly and with great regularity be imparted to the index. Rising at right angles from the middle of the index is a small stem carrying the arm of the *reading glass* (*G*), which, travelling with the index, and having an independent lateral motion, can be brought over any desired portion of the graduated arc. A small ground-glass shade is attached to the reading glass to tone the light when a reading is being taken.

The *vernier* (*D*), which in costly and highly finished instruments is often of gold, is soldered to the index, and is usually so graduated as to subdivide the divisions of 10′ on the arc (with which it is concentric) into 10″, which is then the least reading or "count" of the

instrument. With a well-graduated sextant of large radius, in a favourable light, it is possible for an experienced observer to estimate the angle to within 5″. An arrow (↑ or ↾) is marked at the initial point of the vernier, and is called its index or zero.

The *index glass* (*H*) is a plane mirror with its two faces ground parallel; it is set in a brass frame attached to the upper part of the index bar, and placed with its face perpendicular to the plane of the instrument and over the centre of motion of the index bar, by the motion of which its angle of inclination to the horizon glass is changed. An adjusting screw (*I*), protected by a brass cap screwed over it, for the purpose of placing the glass perpendicular to the plane of the instrument, is in some sextants placed at the back of the glass; but as the position of the latter is not very liable to alter, this means of adjustment is often omitted, the maker seeing that the glass is in its proper position before the instrument leaves his hands.

The *horizon glass* (*K*) is fixed to the radius of the frame of the sextant perpendicular to its plane and parallel to the index glass when the index points to zero; the half of the glass nearest the face of the instrument is silvered, and forms a mirror, which receives the rays reflected from the index glass, and turns them back to the eye of the observer; the other half of the glass is left transparent, and it is through this that one of the objects of observation (usually the horizon from which the glass takes its name) is viewed by direct vision. The horizon glass is furnished with screws for making two adjustments: 1st, to set it perpendicular to the plane of the sextant; 2nd, to set it parallel to the index glass when the index points to zero.

The position and number of these adjusting screws vary in different instruments, but the first adjustment is generally made by a single cap-protected screw (*L*) at the back of the sextant frame; the second adjustment by

a smaller cap-protected screw (*M*) at the back of the glass itself, or by means of two capstan-headed screws near the glass, which, acting against each other, slightly turn on its axis the frame holding the glass. Occasionally the means of making the second adjustment is omitted, in which case the amount of the error must be ascertained and allowed for when reducing the observations.

The sextant should be furnished with a plain tube without any lenses, a small non-inverting telescope, and one or more inverting telescopes (*N*), each of the latter provided with two pairs of parallel wires placed in its focus, each pair crossing the other at right angles, and defining, in the middle of the telescopic field, a small square, wherein all observations should be made.

Occasionally, but not often, the inverting telescope is provided with a rack and pinion to facilitate the focal adjustment. Two or more shades of coloured glass, to screw on the eyepiece of the telescope, are required.

A *ring* or *collar* (*O*) with a triangular stem slides into a socket in the radius of the frame opposite the horizon glass; this collar bears a second ring, into which the telescope is screwed, and which can be adjusted by two opposing screws, so as to set the axis of the telescope parallel to the plane of the instrument. These rings, and the telescope within them, can be raised from or lowered towards the face of the sextant by means of a large mill-headed screw at the end of the socket; thus bringing the optical centre of the telescope opposite any desired part, silvered or transparent, of the horizon glass, in a line perpendicular to the sextant plane—an arrangement by which the relative brightness of the reflected and direct images is regulated.

A set of three or four shades (*P*) coloured glasses of different degrees of transparency are so hinged on the frame that they can be separately or in combination placed between the index and horizon glasses. A similar set (*R*) is

hinged on the opposite side of the horizon glass, and can be turned up into the line of sight between the observer and the object viewed through the transparent portion of the horizon glass.

The *handle* (*S*) of wood is fixed at the back of the instrument; it should be bored with a hole, brass bound, $\frac{1}{3}$ inch in diameter, by which the sextant can be attached to a stand.

A small brass leg under each end of the arc, together with a brass protection-cap under the centre of the instrument, support the latter when laid, as it should be, horizontally in its case or elsewhere.

The sextant case should be of well-seasoned wood, and so fitted as to hold the inverting telescope, with the tube adjusted to the observer's focus, as well as the sextant with the index clamped to any division on the arc between 5° and 100°; it should have receptacles for the coloured eye-pieces of the telescope, for spare index and horizon glasses, for a camel's hair brush to clean the mirrors, and for the several telescopes and tubes. The interior fittings, blocks, &c., should be fastened with screws, not merely glued. A brass folding countersunk handle, hooks and studs to keep the lid closed, and a really good lock and key, are requisite.

ON CHOOSING AN INSTRUMENT.

The following are the approximate prices charged by London makers for good reliable instruments divided on silver:—

3 inch radius divided to 20″	.	.	4 guineas to 7 guineas.					
4	„	„	20″	.	.	5	„	8 „
5	„	„	10″	.	.	7	„	9 „
6	„	„	10″	.	.	8	„	10 „
8	„	„	10″	.	.	9	„	10 „

Superior 8-inch sextants, divided on platinum to 10″, with gold vernier, extra-power telescopes, and with Kew

Observatory certificates, cost from 14 guineas to 18 guineas.

In purchasing a sextant intended for taking with considerable accuracy observations on land, the following points should be attended to:—

1. Choose a sextant that has had its mirrors and shades verified at the Kew Observatory, and see that they bear the mark of that establishment. With a high-priced instrument it is well worth while obtaining the Kew certificate of examination of the finished instrument, which should certify that it is approved for the determination of lunar distances, latitudes, local times, and azimuths, within a maximum error of thirty seconds of arc.

2. The divisions on the arc should be uniformly fine, distinct, and equidistant. Examine the graduation with the reading-glass by a flood of white light, without glare, coming from the sky facing you, and see that when the index is clamped at any part of the arc you have no difficulty, while keeping the eye close to the reading-glass, and *the line of sight perpendicular to the face of the instrument*, in discerning which division, if any, of the vernier coincides with a division of the arc. No more than one division at the same part of the vernier must appear exactly to coincide: if this condition be not fulfilled, the graduation is faulty. If, however, one vernier division appears to fall just a shade to the left of an arc division, while the next higher vernier division seems an equal amount to the right of its corresponding arc division, neither actually corresponding, well and good; for you can then estimate the angle to within two or three seconds, or to less than half the least count of the instrument. Be very careful in making this examination that the optical axis of the reading-glass be brought successively exactly over each division as it is being inspected. It is sometimes advisable, when examining a division, to glance, without moving the head or reading-glass, at the two

adjacent vernier divisions; if they deviate from coincidence with their corresponding arc divisions to an equal extent, the middle division is probably truly coincident with its own arc division.

3. The equality of the distances between the arc divisions should be tested by placing the vernier successively at different parts of the arc and observing whether, when the ↑ is made to coincide with an arc graduation, the division marked 10 also in every instance coincides with an arc division. If it does not do so, the arc divisions are not equidistant.

It is well to note that some verniers are graduated on a small "arc of excess" to the right of the ↑, and also the graduation is sometimes carried to the left a few divisions beyond the highest numbered division, which is usually the tenth.

In reading the instrument be careful not to confound the right-hand division with the vernier index, or zero (↑), when it has an arc of excess.

4. The *tangent screw* should be of sufficient length to afford plenty of run, and must be accurately fitted, to obviate all lost or dead motion (revolution of the tangent screw without corresponding motion of the clamped index arm), though in course of time this defect must, through wear, be expected to develop. Some sextants are fitted with a spiral spring, against which the tangent screw acts, and thus lost motion is avoided.

5. Examine the truth of the surface of the index glass by setting the index near 120°, and observing with the telescope the reflected image of a star of the first magnitude; distinctness and uniformity of outline will be shown by a perfect glass. Absolute truth in the *horizon glass*, though desirable, is not as necessary as in the index glass.

6. Those parts of the sextant near the line of sight, at least, should be browned: whether the whole instrument should be thus treated is a matter of opinion.

Probably, with a bright polished frame, when the sextant has to be exposed to the sun, the errors arising from distortion of the frame as its various parts expand by the absorption of heat, will be less than in a sextant that is entirely browned, and which of course has greater powers of absorption. The error due to the expansion of the sextant under the influence of heat is far from insensible in refined observations.

7. See that the two faces of each shade are parallel, by measuring several times the sun's horizontal diameter, using the shade on the eye-piece of the telescope only; then, removing this shade, turn up an index and horizon shade, and make an equal number of similar measurements: any discrepancy between the two values found by taking the mean of each set of observations exposes an error in the last-named shades. The shade on the telescope eye-piece will not, even if it be imperfect, cause any error.

8. Eccentricity (*i.e.*, non-coincidence of the centre of the graduated arc and the centre about which the index arm revolves) causing errors to the extent of 20″ or 30″, must be expected even in the most carefully made sextants manufactured by the best makers. It is therefore *most important* that the observer should be furnished with a table of corrections to be applied to every tenth or fifteenth degree throughout the arc. As the errors of eccentricity are not easily determined, the purchaser of an instrument should endeavour to obtain from the maker such table of corrections. The eccentricity is found by observing, with the sextant, angles whose true value has previously been determined with a standard theodolite, or by some other means, and comparing the results.

ADJUSTMENTS OF THE SEXTANT.

1. *To set the index glass perpendicular to the plane of the sextant.*—Place the index at about 60°, turn the arc away from you, and hold the instrument nearly horizontal; look obliquely into the index glass, and observe if the arc seen directly and its reflection appear in the same plane; if not, slightly turn the screw *I* till the arc and its reflection seem to form one continuous arc. This adjustment is but seldom required.

2. *To set the horizon glass perpendicular to the plane of the sextant.*—Clamp the index at zero, and observe with the inverting telescope a star—one of the second or third magnitude in preference to a brighter one. Turn the tangent screw, and observe whether the direct and reflected images coincide when passing each other; if they do not, turn the screw *L* till coincidence be obtained. The sun, moon, or indeed any well-defined terrestrial object, can be used in making this adjustment; but a star is to be preferred.

3. *To set the horizon glass parallel to the index glass when the index is at zero.*—This adjustment is not absolutely necessary, as the error arising from an inclination of the two glasses is easily determined, and can be allowed for. Perfect adjustment is by no means easily made, but it is well to have the error (called "index error") conveniently small; so an approximate adjustment should be made in the following manner:—

Fix the index exactly at zero, and observe a second or third magnitude star through the inverting telescope. If the reflected and direct images be not coincident, turn the small screw *M* at the back of the horizon glass till the two images appear as one. Here, as in the case of the second adjustment, the sun, moon, or a well-defined distant terrestrial object, may be employed when there happens to be no star suitable for observation.

4. *To place two of the cross wires of the telescope parallel to the plane of the instrument.*—Observe a star or any point through the telescope, and by placing the index three or four degrees on either side of zero, separate the reflected and direct images so that one of them shall be near the top and the other near the bottom of the telescopic field; bring the edge of one of the vertical wires into contact with the image near the top of the field, and revolve the telescope tube in its cell till the same edge of the same wire is in contact with the lower image. The wire will then be parallel to the plane of the instrument, and the tube and cell may be marked so that the former can on future occasions be at once placed in its proper position.

5. *To set the axis of the telescope parallel to the plane of the sextant.*—Turn the sliding tube of the inverting telescope till two of the wires are parallel to the plane of the sextant, select two celestial objects—as the moon's limb and a star, the moon's limb and the sun's limb, or two stars—whose angular distance is between 100° and 120°; bring the reflected image of one and the direct image of the other into contact at that part of the field of the telescope which is close to the wire nearest the sextant plane; clamp the index, and by slightly changing the position of the instrument bring the images close to the wire farthest from the plane of the sextant. If the contact still remains perfect, no adjustment is required; but if, on the other hand, the two objects appear to separate, slacken the screw in the telescope ring farthest from the sextant frame, and tighten the one on the opposite side; if the images overlap, reverse the operation. If this adjustment be not perfect, the observed angles are always too large.

TO ASCERTAIN THE INDEX ERROR.

1. *By the sun.*—Clamp the index at about 30′, and, holding the sextant horizontally, observe the sun through the inverting telescope, on which the coloured glass eye-piece must be screwed. Turning the tangent screw, make the near limbs of the images slightly overlap if they do not already do so; then, reversing the motion of the tangent screw, make the contact of the limbs as perfect as possible. The point of contact must be in the middle of the square defined by the cross-wires of the telescope. Keep the eye close to the eye-piece and don't change its relative position during the observation. Read (see page 17) the vernier, and note down its indications, giving them the − sign. Next clamp the index at about 30′ on the arc of excess (to the right of zero, 0°), and observe as before; read (see page 17) and note down, giving this observation the + sign.

Then half the arithmetical difference of these two readings is the "index error," and the "index correction" should be applied according to the sign (+ or −) of the greater reading.

Let the readings be as follows:—

		′	″
1st reading, on the arc	−	32	30
2nd ,, off ,, (on "arc of excess")	+	31	40
2)		0	50
Index correction	−		25

Again:

		′	″
1st reading, on the arc	−	31	50
2nd ,, off ,, ...	+	32	10
2)		0	20
Index correction	+		10

In the first example, the correction 25″ must be sub-

tracted from all observations, to free them from index error; in the second example, 10″ must be added.

If the arithmetical sum of the two readings be divided by 4, the quotient gives the observed semi-diameter of the sun, which, if the observations have been well made, will be found to agree within one or two seconds with the sun's semi-diameter as given in the almanac.

To obtain precision, a number of observations, both on and off the arc, should be taken, and the mean of each set used instead of a single pair of readings.

Example.—On June 14, 1885, the following measures were taken :—

On the Arc.	Off the Arc.	
′ ″	′ ″	
− 32 10	+ 30 50	
32 10	30 55	
32 15	31 5	
32 5	31 0	′ ″ 32 8·57
32 0	31 0	31 0·71
32 15	31 5	
32 5	31 10	4)63 9·28
7)225 0	7)217 5	15 47·32 Obsd.semi-diam.of sun.
− 32 8·57 Means	+ 31 0·71	′ ″
+ 31 0·71		15 46·70 S D. of sun ☿ Almanac.
2) 1 7·86		
− 33·9 Index correction.		

N.B.—In determining the index correction by the above method, be careful not to expose the sextant to the rays of the sun more than is absolutely necessary, as the error alters perceptibly when the temperature of the instrument changes to any great extent, and should altitudes of the stars, planets, or moon have to be observed in the cooler temperature of night, the correction obtained when the sextant frame was expanded through exposure to a hot sun will not be applicable, and it will therefore be necessary to re-determine the index error.

2. *By a star.*—Clamp the index at 0°, and observe with the inverting telescope a second or third magnitude

star; bring the direct and reflected images into coincidence by means of the tangent screw, and read the vernier. This reading is the index error, and the correction is numerically equal to it: positive, when the reading is off the arc; minus, when on the arc.

The observation for the correction by this method is not so easy to make with accuracy as the solar one, but the method will often be found useful.

The index correction can also be approximately determined by observing in a similar manner a well-defined *distant* terrestrial object—the sea horizon, for instance.

CARE OF THE INSTRUMENT.

In removing the sextant from its box, lift it by the frame or the handle; never by the index bar.

When not in use the index should be kept lightly clamped to the arc.

Never force the tangent screw when it is at the end of its run, or when the index bar is near either extremity of the arc, where it is liable to come in contact with the frame holding the horizon glass or the stem of the telescope collar.

Clean the index and horizon glasses as seldom as possible, and then only use the very softest material for the purpose; the less these glasses are touched the better, as they are easily put out of adjustment. To remove dust, &c., brush them carefully with a camel's-hair brush kept for the purpose.

After cleaning the glasses, and before observing an angle, test the adjustments, and verify the index correction.

The telescope lenses, the shades, and reading glass may be cleaned with a piece of chamois leather; this material should also be used for polishing the arc and frame. Be careful that not the minutest particle of mercury from the artificial horizon be allowed to touch

the graduated arc or vernier, for a stain will result from such contact. The sextant must never be touched by a leather which has been used to strain the horizon mercury.

Guard the instrument from all concussion, and never trust it in the hands of a person unacquainted with the delicacy of astronomical instruments used for angular measurement.

Keep its box locked when the sextant is in it.

READING THE ARC.

The arc is usually graduated to divisions of ten minutes (10′) each, which are subdivided by the vernier to ten seconds (10″).

Fig. 4.

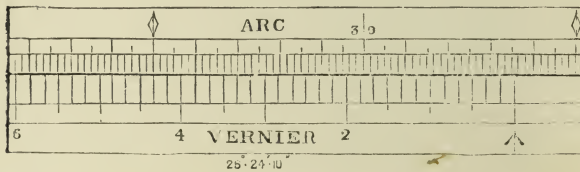

On the arc itself the main graduations indicate degrees (°), every fifth being cut somewhat longer than its fellows, and marked ↑, while each tenth graduation is engraved with its proper number.

Every degree is subdivided by five shorter lines into six divisions of ten minutes (10′) each; the middle line of the five being rather longer than the others indicates the half-degree, or 30′.

On the vernier the larger graduations represent minutes (′), every alternate one being engraved with a number showing its value.

Each minute is subdivided, by five shorter graduations, into six divisions of ten seconds (10″), which is the least count of the instrument.

To read off an observation, note where the zero (↑ or ↑) of the vernier rests, and observe how many whole degrees and subdivisions (of ten minutes each) lie between it and the zero of the arc. Suppose 26° and two subdivisions are thus found to be to the right of the vernier ↑, then the reading is 26° 20′. Probably the vernier ↑ will be found somewhat to the left of its corresponding arc graduation, in which case run the eye along the vernier lines until one of them is found to coincide with an arc graduation. The angular value of this line from vernier ↑ will be apparent, as the figures engraved on the vernier indicate the number of minutes, and the smaller lines the number of subdivisions of ten seconds (10″) each. This value must be added to the reading already taken from the arc. Suppose the coincident vernier line shows that 4 minutes and one subdivision lie between it and ↑, then 4′ 10″ is the vernier reading to be added.

The whole reading will be—

	°	′	″
On the arc	26	20	0
On the vernier . . .	+ 0	4	10
Instrumental reading . .	26	24	10

To read an angle on the "arc of excess" (which seldom exceeds 5°), read from left to right the number of degrees and minutes on the arc between its zero and the vernier ↑, observe the vernier as before directed, subtract its reading from 10′, and add the difference so found to the arc reading.

Suppose the arc reading to be 1° 30′ and the vernier reading 8′ 20″, then—

10′ − 8′ 20″ = 1′ 40″

	°	′	″
Arc . .	1	30	0
Vernier . .	0	1	40
Instrumental angle .	1	31	40

Or, if preferred, the vernier can, like the arc, be read from

left to right, commencing at 10′ instead of at ↑, and counting the minutes and seconds between the former and the coincident line; add these direct to the arc reading.

In reading off an angle with the reading glass the importance of keeping the line of sight absolutely perpendicular to the plane of the arc cannot be overestimated.

If this precaution be neglected, the error arising from parallax will be considerable.

THE ARTIFICIAL HORIZON.

This is a highly reflecting plane surface placed in a truly horizontal position. Quicksilver (mercury) or any viscous fluid protected from the wind, or any force which would impart a tremor to its surface, can be used.

The angle between an object and its reflection from the artificial horizon is double the altitude of the object from the observer's *sensible* horizon, therefore if the former be measured with the sextant, or other instrument, and the reading halved, the observer obtains the observed altitude of the object, which is what he requires for his calculations.

Fig. 5.

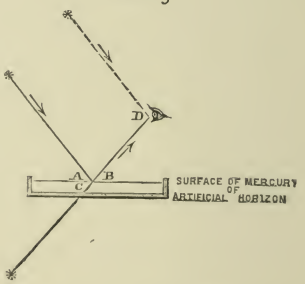

Suppose a ray from a star be reflected from the mercury of an artificial horizon to the eye; the direct rays from the star to the eye will fall in the direction of